Chapter 6

Boat
Switch

A. Sheet Metal.

Step 1. Click File Menu > New, click **Part** and OK.

Step 2. Click **Right** (plane) in the Feature Manager and click **Sketch** from the Content toolbar, **Fig. 1**.

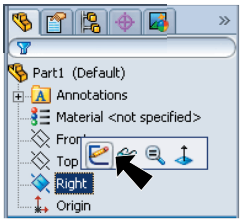

Fig. 1

Step 3. Click **Line** (**L**) on the Sketch toolbar.

Step 4. Starting from the Origin draw two lines in **Fig. 2**.

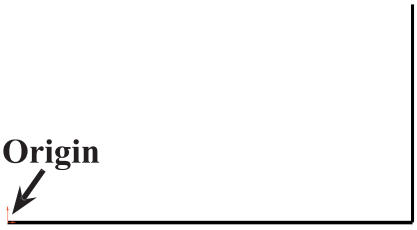

Fig. 2

Step 5. Click **Fully Defined Sketch** (**D**) on the Sketch toolbar and OK in the Property Manager.

Step 6. Dimension the lines as shown in **Fig. 3**.

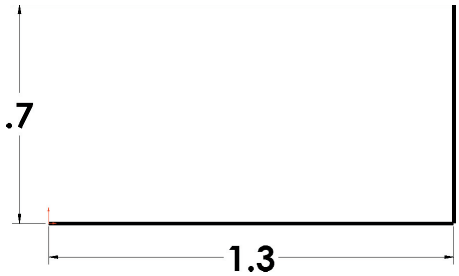

Fig. 2

Step 7. Click Insert Menu > Sheet Metal > Base Flange.

Step 8. In the Property Manager,
under **Direction 1**:
Select **Mid Plane, Fig. 4**
Set Depth to **.5**
under **Sheet Metal Gauges**:
Check **Use gauge table**
Select **Sample Table - Aluminum**
under **Sheet Metal Parameters**:
Select **Gauge 26**
click OK, **Fig. 5**.

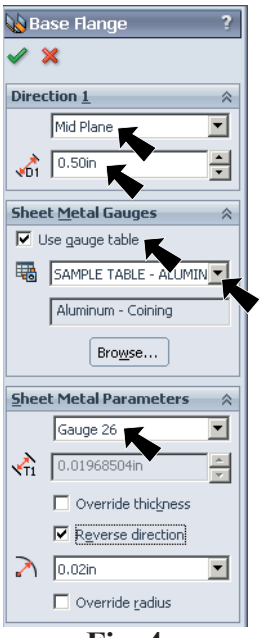

Fig. 4

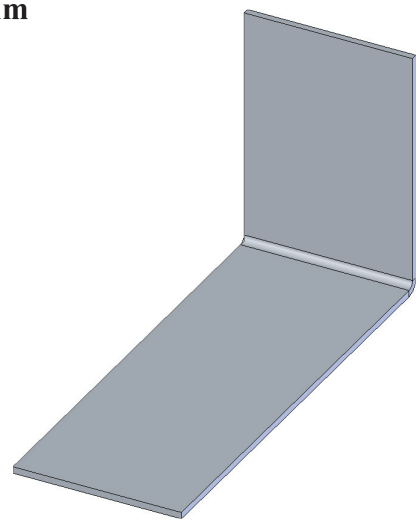

Fig. 5

B. Save as "SWITCH".

Step 1. Click File Menu > Save As.

Step 2. Key-in SWITCH for the filename and press ENTER.

© Cudacountry.net Tech Ed

http://www.cudacountry.net email:cudacountry@comcast.net

C. Hole.

Step 1. Click the **top face** and click **Sketch** on the Content menu, **Fig. 6**.

Step 2. Click **Normal To** on the Views toolbar (**Ctrl-8**).

Step 3. Click **Circle** **(S)** on the Sketch toolbar.

Step 4. Draw circle for hole, **Fig. 7**.

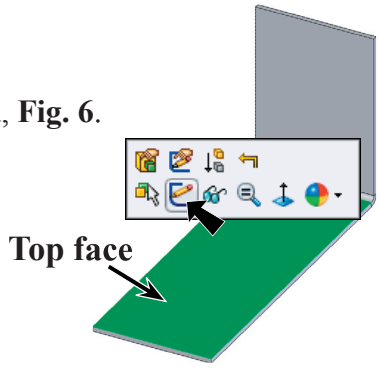

Fig. 6

Step 5. Click **Smart Dimension** on the Sketch toolbar.

Step 6. Add dimensions as shown in **Fig. 8**. To Smart dimension circle distance from edge, click circle and click edge, then move cursor out away and click to place dimension. Key-in the dimension and press ENTER. Arrange the dimensions as shown in **Fig. 8**.

Step 7. Click **Features** on the Command Manager toolbar.

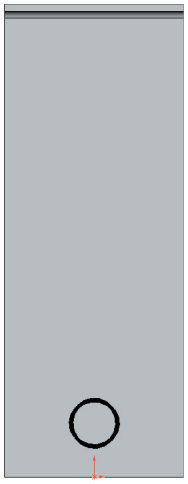

Fig. 7

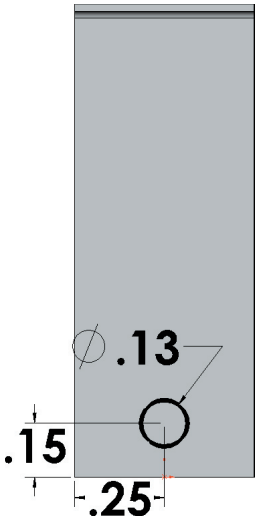

Fig. 8

Step 8. Click **Extruded Cut** on the Features toolbar.

Step 9. Click **Isometric** on the View toolbar.

Step 10. In the Property Manager,
under **Direction 1**
set End Condition to **Through All**
click OK , **Fig. 9** and **Fig. 10**.

Step 11. Save. Use **Ctrl-S**.

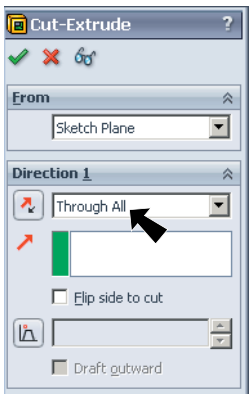

Fig. 9

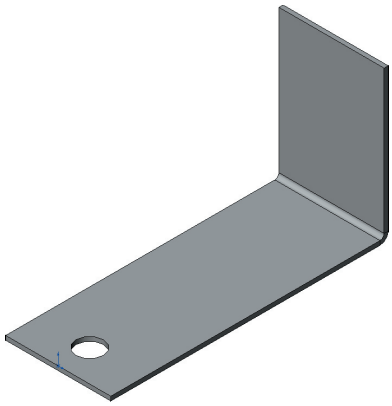

Fig. 10

D. Chamfers.

Step 1. Click **Chamfer** in the **Fillet flyout** on the Features toolbar.

Step 2. In the Chamfer Property Manager set:

Depth to **.1**

Angle **to 45 degrees, Fig. 11**.

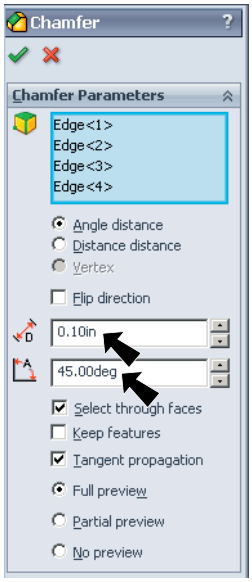

Fig. 11

Step 3. Drag a selection around each corner to select the corner edge, **Fig. 12**, then click OK .

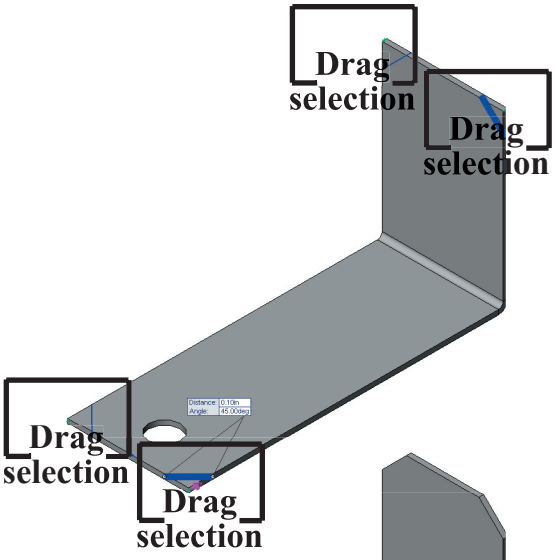

Fig. 12

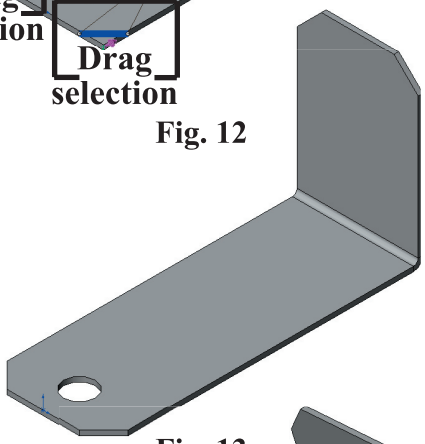

Fig. 13

E. Jog.

Step 1. Rotate view to view **bottom face**, hold down middle mouse button (wheel) and drag to **rotate view**, **Fig. 14**.

Step 2. Click the **bottom face** and click **Sketch** on the Content menu, **Fig. 14**.

Step 3. Click **Line** **(L)** on the Sketch toolbar.

Step 4. Draw line across sheet metal, **Fig. 15**. Keep line perpendicular to the edge of sheet metal.

Step 5. Click **Smart Dimension** **(S)** on the Sketch toolbar.

Step 6. Add **.4** dimension as shown in **Fig. 15**.

Step 7. Click Insert Menu > Sheet Metal > Jog.

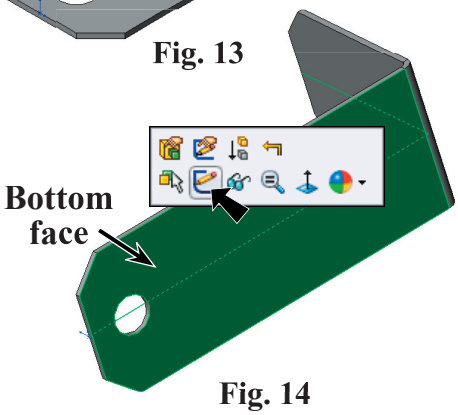

Fig. 14

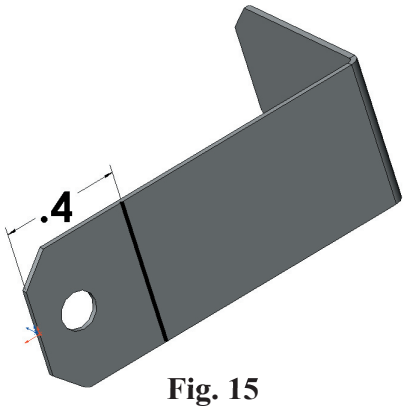

Fig. 15

Step 8. In the Jog Property Manager, under **Fixed Face**:

click **bottom face next to hole**, **Fig. 17**

set **Depth** to **.09**

set **Jog Angle to 15 deg**

under **Jog Offset**
sheet metal should jog as shown in **Fig. 17**, if jogs in opposite direction

click **Reverse Direction**

click OK , **Fig. 18**.

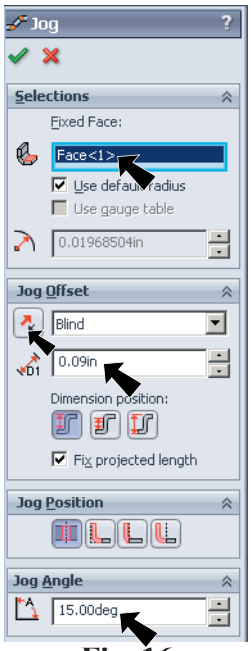

Fig. 16

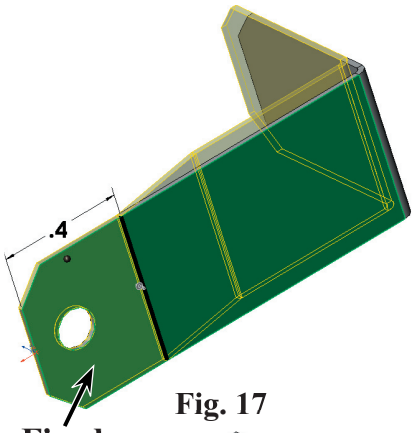

Fig. 17

Fixed face

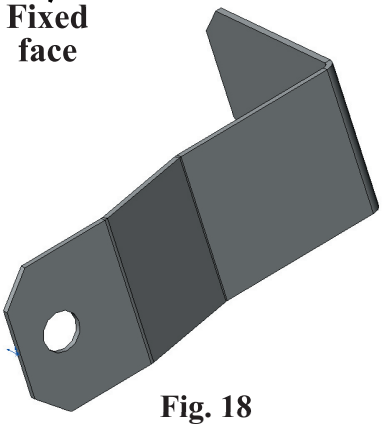
Fig. 18

F. Material Galvanized Steel.

Step 1. Click **Isometric** on the View toolbar.

Step 2. **Right click Material** in the Feature Manager and click **Edit Material**.

Step 3. Expand **Steel** in the material tree and click **Galvanized Steel**. Click **Apply** and **Close**.
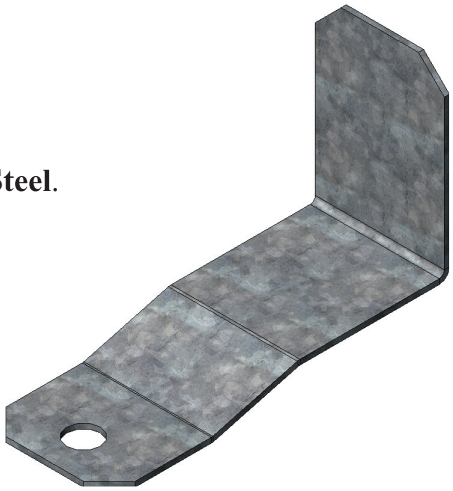
Step 4. Save. Use **Ctrl-S**.