Boat

Boat Assembly

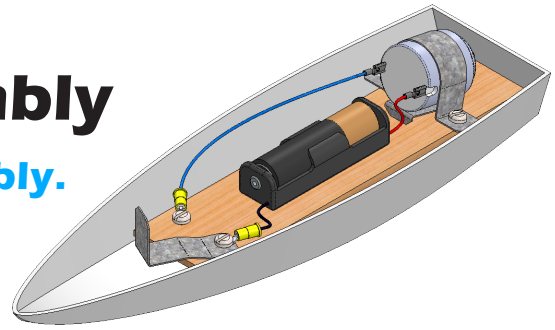

A. Insert Hull and Power Train Assembly.

Step 1. Click File Menu > New, click **Assembly** and OK.

Step 2. Click **Keep Visible** in the Property Manager, **Fig. 1**.

Step 3. Click **Browse** in the Property Manager, **Fig. 1**.

Step 4. Select your **HULL MID PLANE** file and click Open.

Step 5. Click OK in the Property Manager. This will place Hull origin at the assembly origin and fix the position so Hull cannot move. This fixed component should have a **(f)** before its name in the Feature Manager.

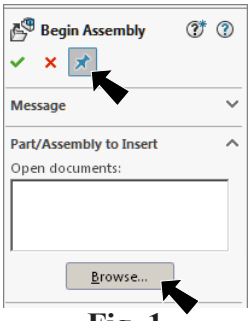

Fig. 1

Step 6. Click **Browse** in the Property Manager.

Step 7. In the Open dialog box change **Files of type** to **SOLIDWORKS files** to view your Assembly files.

Step 8. Select your **POWER TRAIN ASSEMBLY** file and click Open.

Step 9. Click approximately where Power Train Assembly is positioned in **Fig. 2**. Click OK in the Property Manager when done.

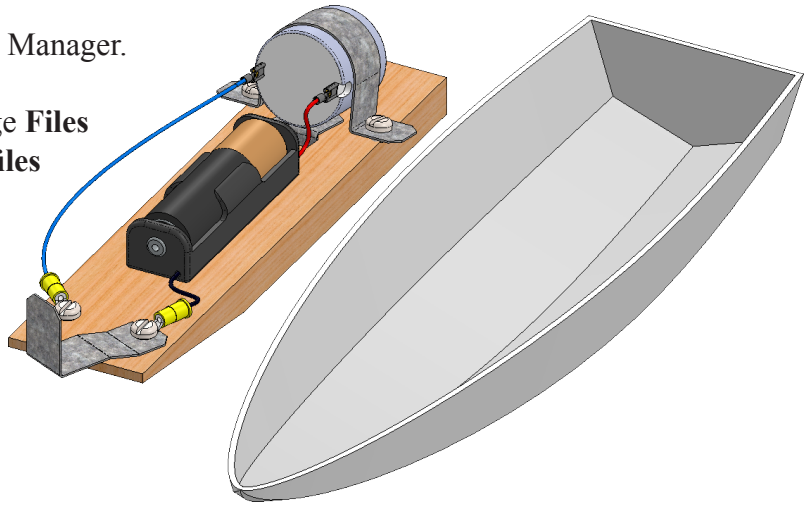

Fig. 2

B. Save as "BOAT ASSEMBLY".

Step 1. Click File Menu > Save As and Yes to Rebuild Now.

Step 2. Key-in **BOAT ASSEMBLY** for the filename and press ENTER.

© Cudacountry.net Tech Ed
http://www.cudacountry.net email:cudacountry@hotmail.com

C. Mate: Power Train Assembly.

Step 1. Click **Mate** on the Assembly toolbar.

Step 2. Expand the flyout Feature Manager design tree (click ▸) in the top left corner of the graphics area and click **Right Plane**, **Fig. 3**.

Step 3. Expand **Power Train Assembly** and click **Right Plane**, **Fig. 3**.

Step 4. Click Add/Finish Mate to add **Coincident** mate.

Step 5. Click **Filter Faces** (**X**) on the **Selection Filter toolbar** at the bottom of the graphics area, **Fig. 5**. If necessary use **F5** key to graphics area the toolbar.

Step 6. Click **top face of Hull** and the **top face of the Base**, **Fig. 6**.

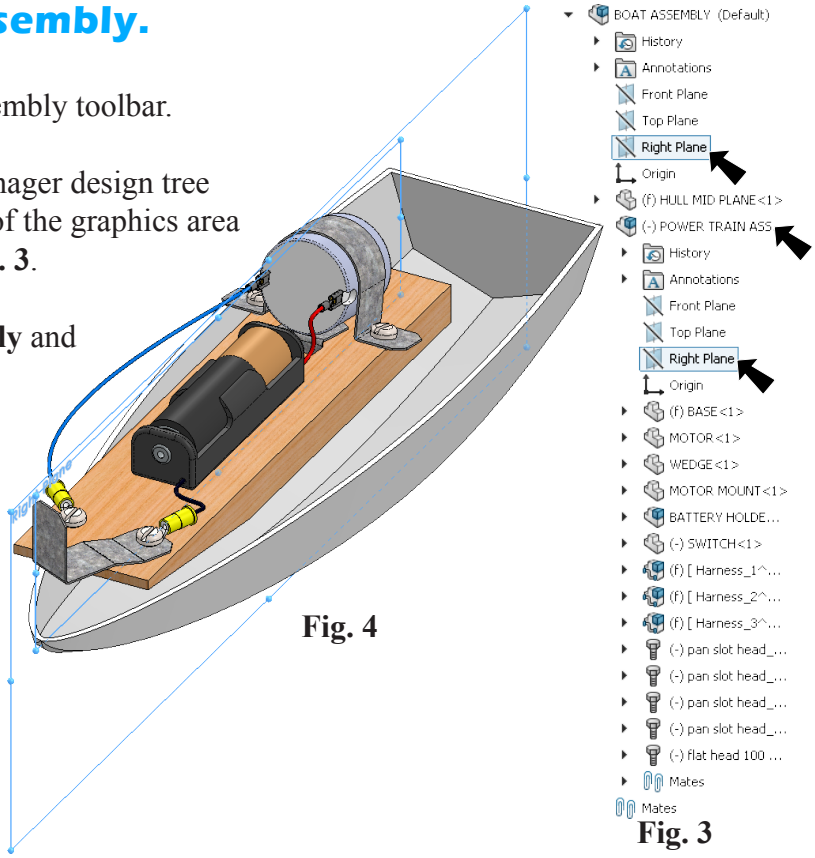

Fig. 4

Fig. 3

Fig. 5

Step 7. Click **Distance** in Mate pop-up, **Fig. 7**. Set **distance .45** and press ENTER. The Base should **extent down into the Hull .45**, **Fig. 8**. If positioned in opposite direction, click **Flip Dimension** in the Mate pop-up, **Fig. 7**. Click Add/Finish Mate to add Distance mate.

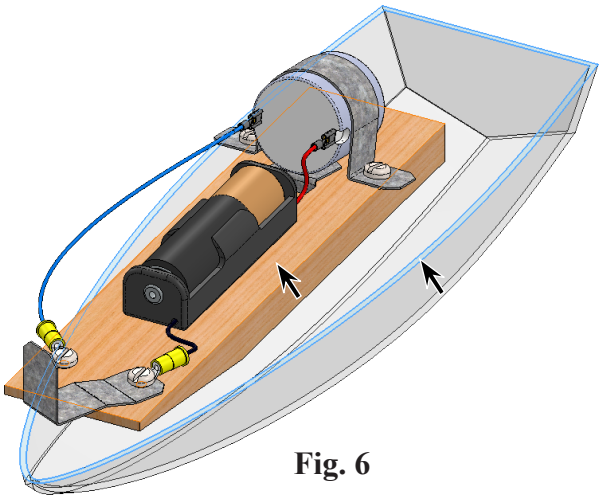

Fig. 6

Fig. 7

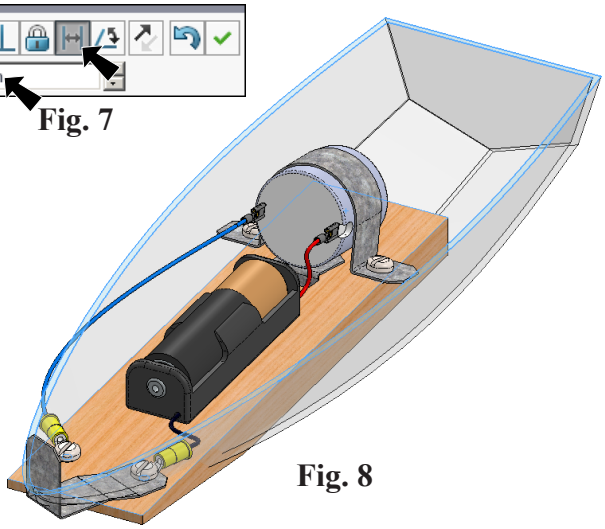

Fig. 8

Step 8. Click the **rear inside face of Hull**, **Fig. 9**.

Step 9. Rotate view to view **rear of Base**, **Fig. 10**. To rotate, hold down middle mouse button (wheel) and drag.

Step 10. Click **rear face of the Base**, **Fig. 10**.

Step 11. Click Add/Finish Mate to add **Coincident** mate.

Step 12. Click OK in the Property Manager when done.

Step 13. Turn **off** Filter Faces. Click **Filter Faces** (**X**) on the **Selection Filter toolbar** at the bottom of the graphics area, **Fig. 12**.

Step 14. Save. Use **Ctrl-S**.

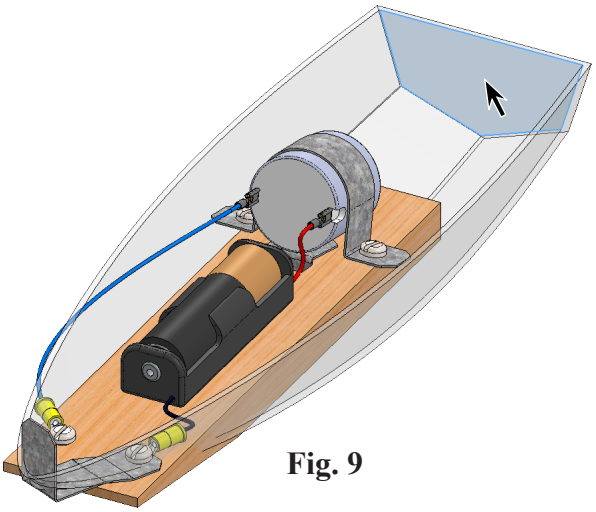

Fig. 9

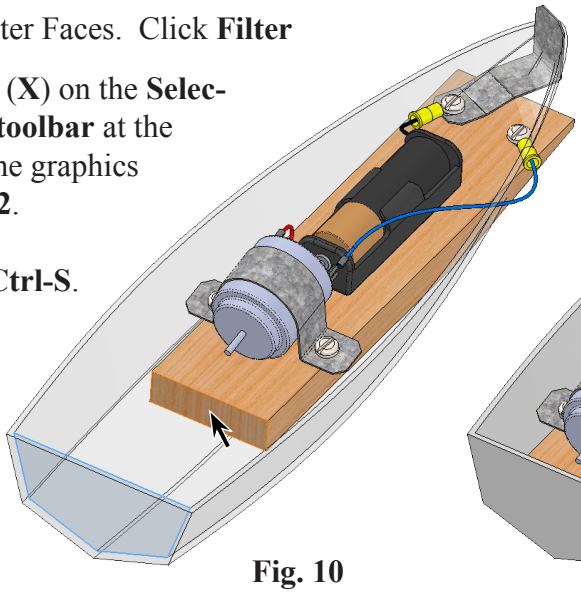

Fig. 10

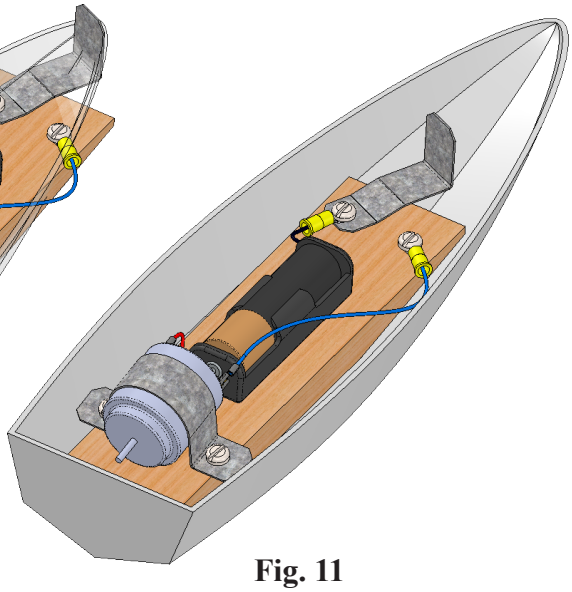

Fig. 11

Fig. 12