Chapter 9

Boat

Battery Holder AA

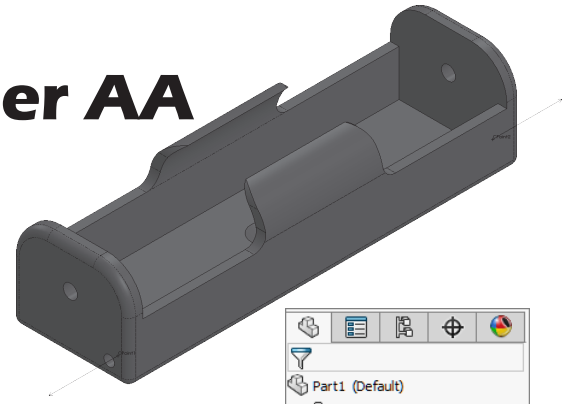

A. Front Extrude.

Step 1. Click File Menu > New, click **Part** and OK.

Step 2. Click **Front Plane** in the Feature Manager and click **Sketch** on the context toolbar, **Fig. 1**.

Step 3. Click **Corner Rectangle** (**S**) on the Sketch toolbar.

Step 4. Sketch a rectangle starting at the Origin , **Fig. 2**.

Step 5. **Right click graphics area and click Select** from menu to unselect Rectangle tool.

Step 6. Click the **right line** of rectangle and click **Construction Geometry** on the context toolbar, **Fig. 3**.

Step 7. Click **Smart Dimension** (**S**) on the Sketch toolbar.

Step 8. Add dimensions, **Fig. 4**. Dimension **double distance** .66. To double distance dimension, click centerline and then left vertical line, move the cursor below centerline (Origin) and click. Key-in .66 in the Modify box and press ENTER.

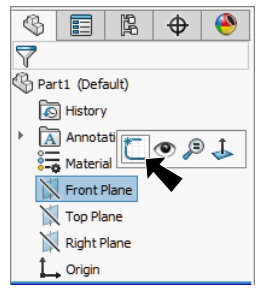

Fig. 1

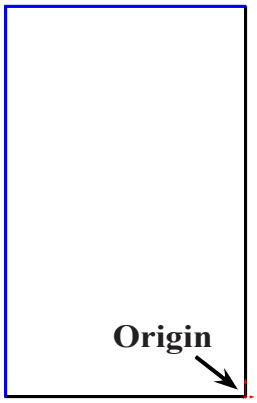

Fig. 2

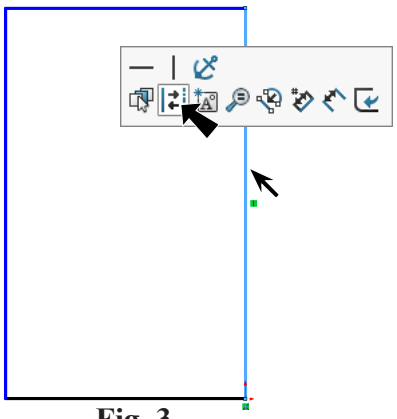

Fig. 3

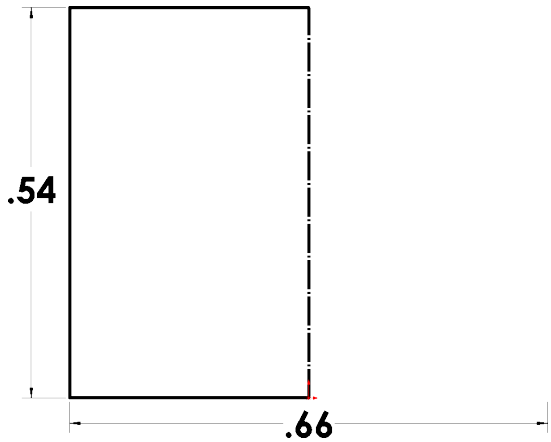

Fig. 4

© Cudacountry.net Tech Ed
http://www.cudacountry.net email:cudacountry@hotmail.com

Step 9. Click **Sketch Fillet** on the Sketch toolbar.

Step 10. In the Sketch Fillet Property Manager set:
under Fillet Parameters, **Fig. 5**

Radius **.2**
click **top left corner**, **Fig. 6**

click OK **twice**.

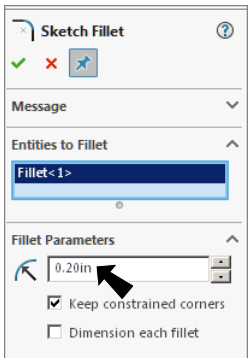

Fig. 5

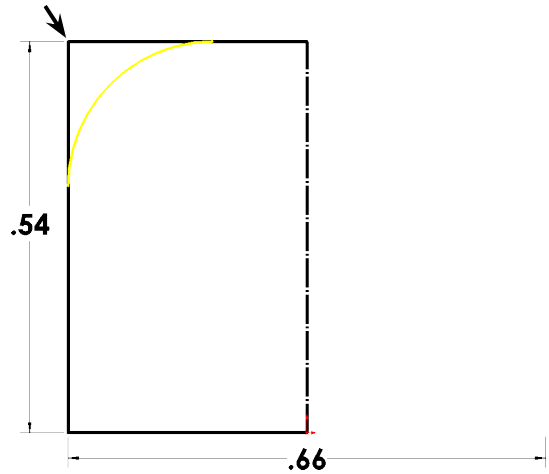

Fig. 6

Step 11. Drag a selection to select all geometry, **Fig. 7**.

Step 12. Click **Mirror Entities** on the Sketch toolbar, **Fig. 8**.

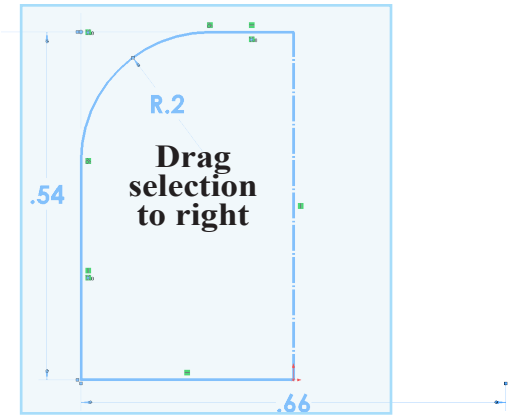

Fig. 7

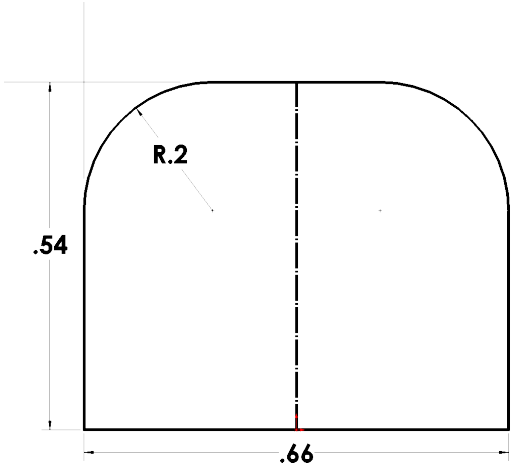

Fig. 8

B. Extrude Front Cut.

Step 1. Click **Features** on the Command Manager toolbar.

Step 2. Click **Extruded Boss/Base** on the Features toolbar.

Step 3. In the Property Manager set:
under Direction 1, **Fig. 9**
End Condition **Mid Plane**

Depth **2.22**

click OK .

Step 4. Click **Zoom to Fit** **(F)** on the View toolbar.

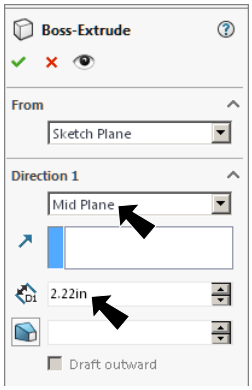

Fig. 9

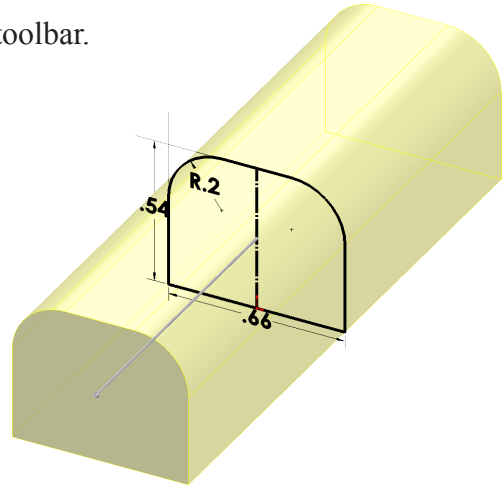

Fig. 10

C. Save as "BATTERY HOLDER".

Step 1. Click File Menu > Save As.

Step 2. Key-in **BATTERY HOLDER** for the filename and press ENTER.

D. Side Cut.

Step 1. Click **side face of holder** and click **Sketch** on the context toolbar, **Fig. 11**.

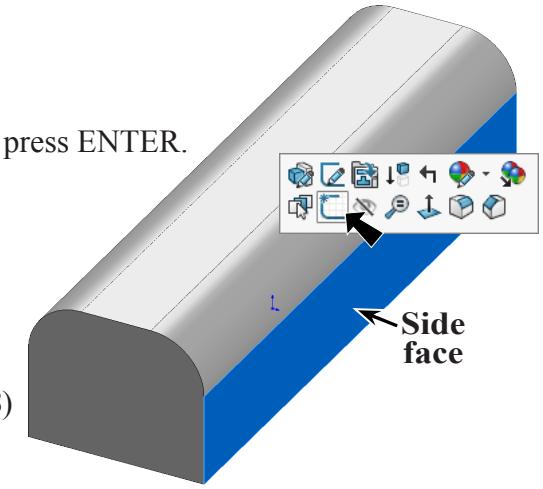

Fig. 11

Step 2. Click **Normal To** on the View toolbar. (**Ctrl-8**)

Step 3. Click **Centerline** in the **Line flyout** on the Sketch toolbar.

Step 4. Starting from the Origin, sketch vertical centerline, **Fig. 12**.

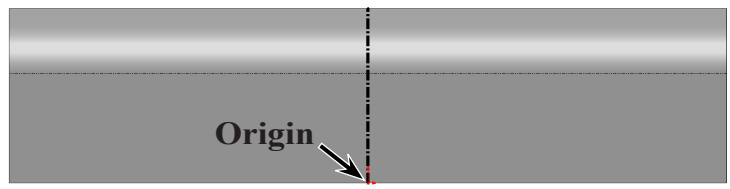

Fig. 12

Step 5. Click **Line** (**L**) on the Sketch toolbar.

Step 6. Sketch **four** lines, **Fig. 13**. Don't forget line along the top edge of part up to the centerline.

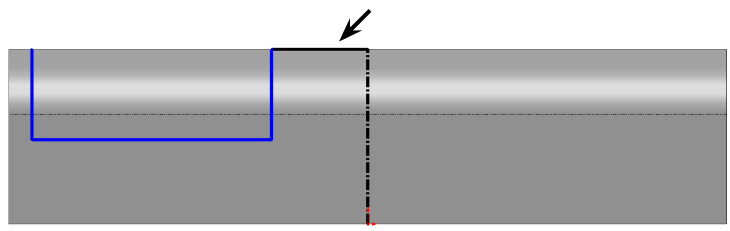

Fig. 13

Step 7. Click **Smart Dimension** (**S**) on the Sketch toolbar.

Step 8. Add dimensions, **Fig. 14**.

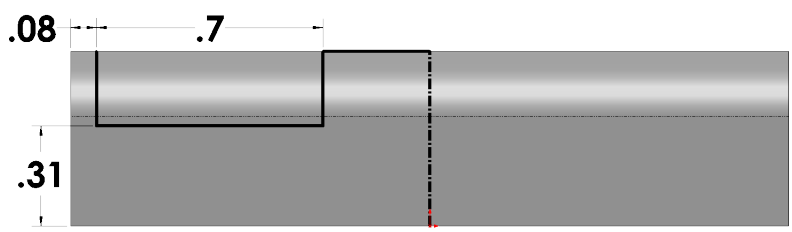

Fig. 14

Step 9. Click **Sketch Fillet** on the Sketch toolbar.

Step 10. In the Sketch Fillet Property Manager set:
under Fillet Parameters, **Fig. 15**

Radius **.07**
click the **two corners**, **Fig. 16**
click OK **twice**.

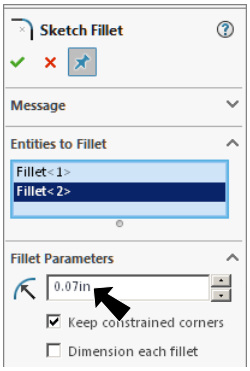

Fig. 15

Step 11. **Drag selection around sketch** to select all entities, **Fig. 17**.

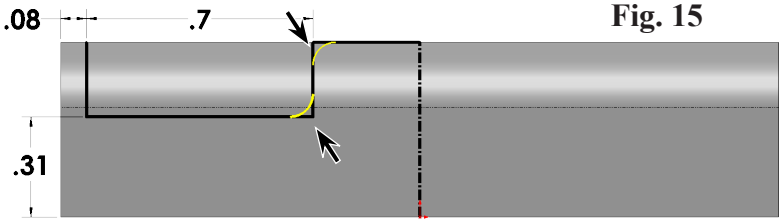

Fig. 16

Step 12. Click **Mirror Entities** on the Sketch toolbar, **Fig. 18**.

Step 13. Click **Features** on the Command Manager toolbar.

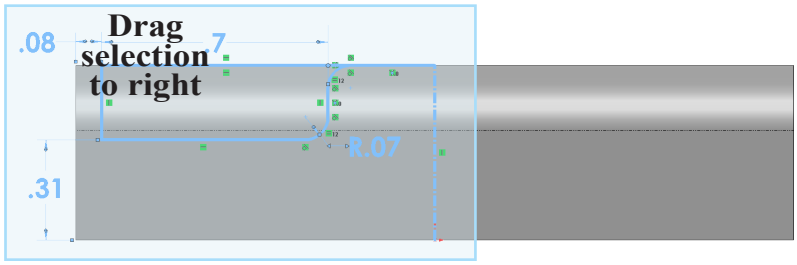

Fig. 17

Step 14. Click **Extruded Cut** on the Features toolbar.

Step 15. In the Cut-Extrude Property Manager set:
under Direction 1, **Fig. 19**
End Condition
Through All
check **flip side to cut**
click OK .

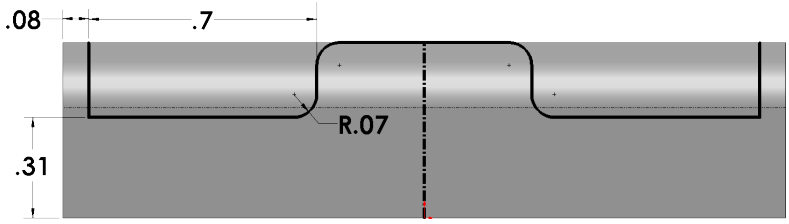

Fig. 18

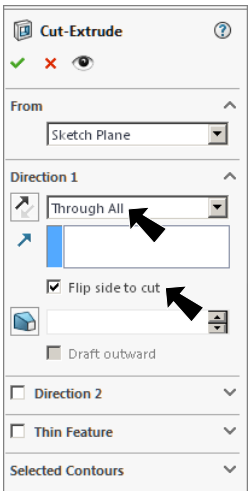

Fig. 19

Step 16. Save.
Use **Ctrl-S**.

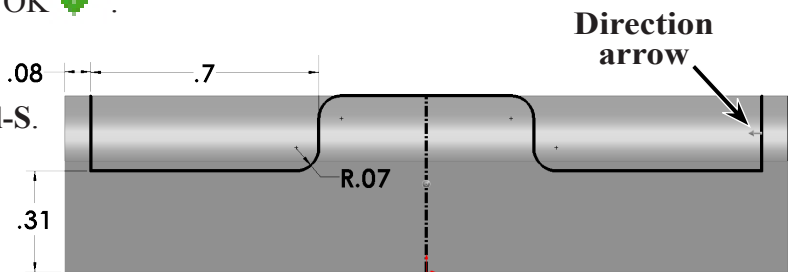

Fig. 20

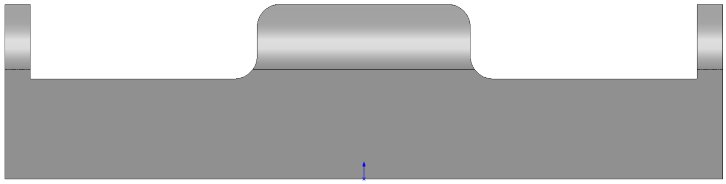
Fig. 21

E. Inside Cut.

Step 1. Click **Trimetric** on the Standard Views toolbar.

Step 2. Click **inside back face of holder** and click **Sketch** on the context toolbar, **Fig. 22**.

Step 3. Click **Normal To** on the View toolbar. (**Ctrl-8**)

Step 4. Click **Centerline** in the **Line flyout** on the Sketch toolbar.

Step 5. Starting from the Origin, sketch vertical centerline up through part, **Fig. 23**.

Step 6. Click **Line** (**L**) on the Sketch toolbar.

Step 7. Sketch **three lines**, **Fig. 24**.

Step 8. Click **Smart Dimension** (**S**) on the Sketch toolbar.

Step 9. Add dimensions, **Fig. 25**.

Step 10. Click **Tangent Arc** in the **Arc flyout** on the Sketch toolbar.

Step 11. Sketch arc between top endpoint of vertical line and left endpoint of horizontal line, Position 1 and Position 2, **Fig. 26**. Start arc at Position 1 and swing up along path.

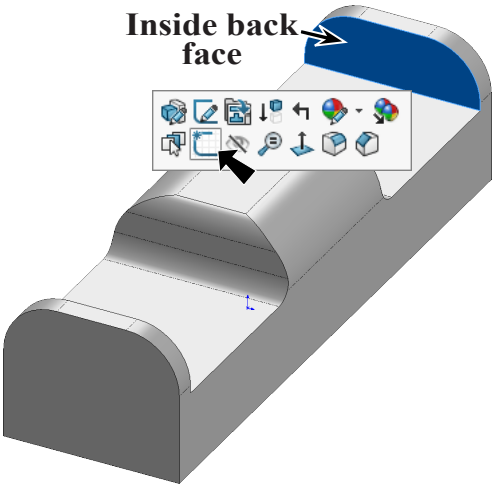

Fig. 22

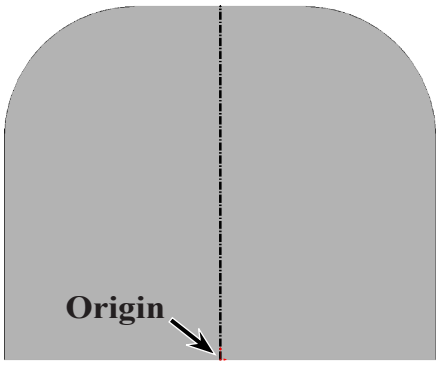

Fig. 23

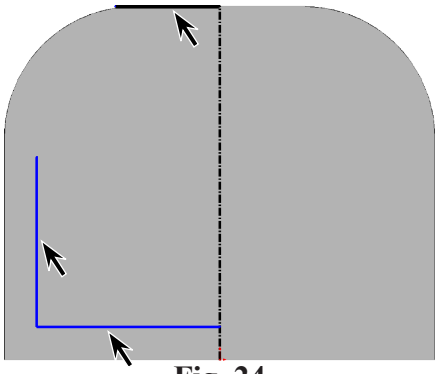

Fig. 24

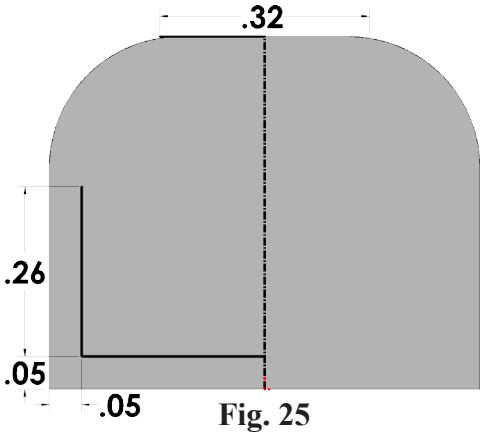

Fig. 25

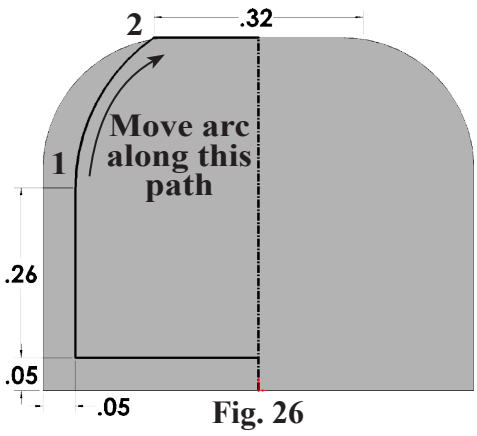

Fig. 26

Step 12. **Right click graphics area and click Select** from menu to unselect Arc tool.

Step 13. Drag a selection to select all geometry, **Fig. 27**.

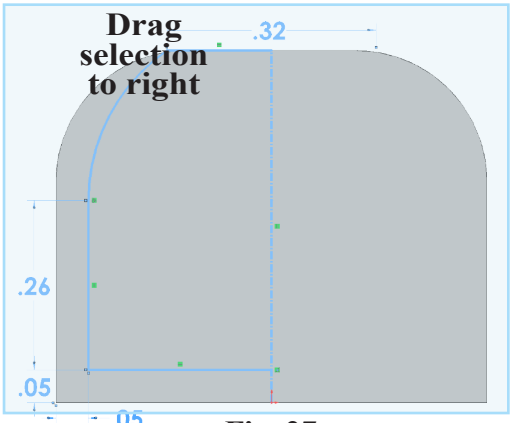

Fig. 27

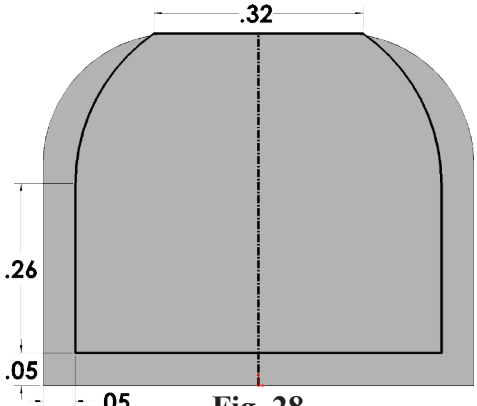

Fig. 28

Step 14. Click **Mirror Entities** on the Sketch toolbar, **Fig. 28**.

Step 15. Rotate view to view **inside front face at the other end of holder**, hold down middle mouse button (wheel) and drag to rotate view, **Fig. 30**.

Step 16. Click **Features** on the Command Manager toolbar.

Step 17. Click **Extruded Cut** 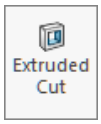 on the Features toolbar.

Step 18. In the Cut-Extrude Property Manager set:
under Direction 1, **Fig. 29**
End Condition **Up To Surface**
click in the **Face/Surface box**
click **inside front face of holder**, **Fig. 30**
click OK ✔ .

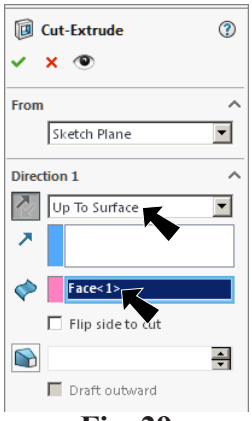

Fig. 29

Step 19. Save. Use **Ctrl-S**.

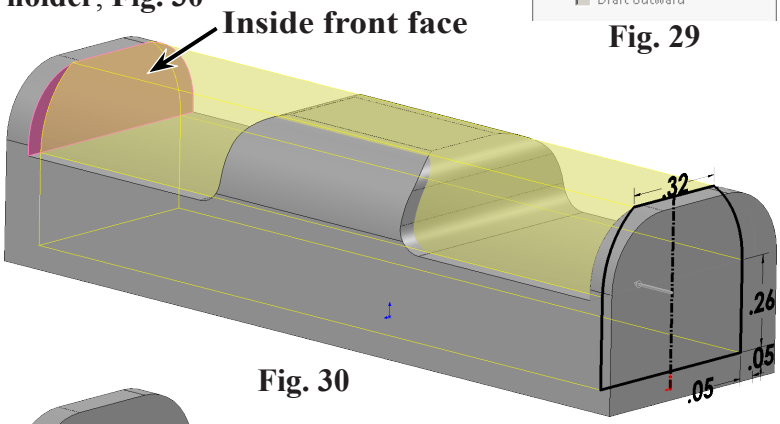

Fig. 30

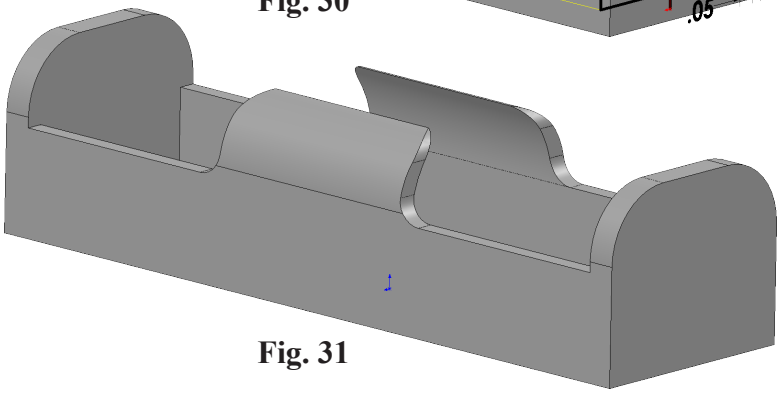
Fig. 31

F. Screw Hole.

Step 1. Click **Top** on the Standard Views toolbar. (**Ctrl-5**)

Step 2. Click **Hole Wizard** Hole Wizard on the Features toolbar.

Step 3. In the Property Manager on the Type tab set:
under Hole Type, **Fig. 32**
click **Countersink**
under Standard
Standard **ANSI Inch**
Type **Flat Head Screw (100)**
under Hole Specification
Size #2
under End Condition
Through All
click **Positions tab** Positions at top of the Property Manager.

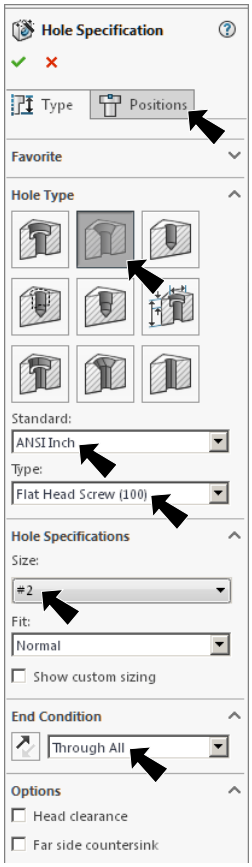

Fig. 32

Step 4. Click the **inside bottom face of part** one time as face for hole, **Fig. 33**.

Step 5. Click the Origin for hole location. Use the coincident relation icon to locate the Origin, **Fig. 34**.

Step 6. Click OK in the Hole Wizard Property Manager.

Step 7. Save. Use **Ctrl-S**.

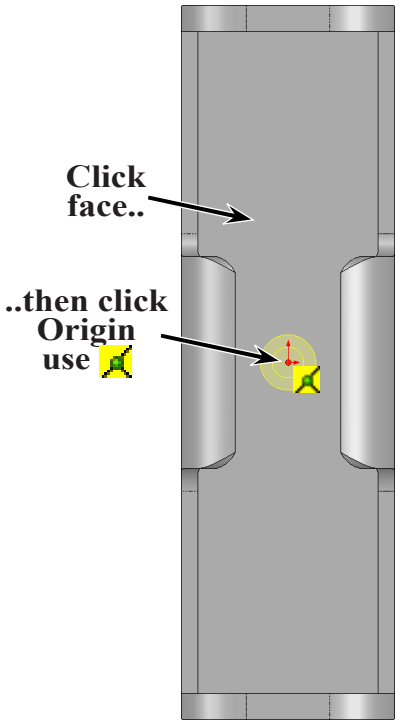

Fig. 33

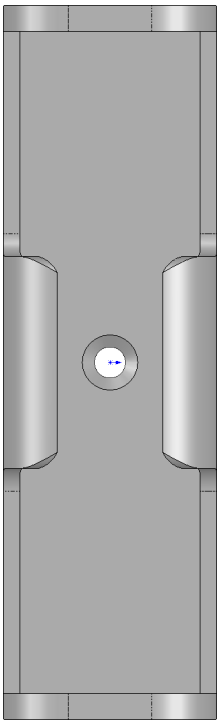
Fig. 34

G. Lug Hole.

Step 1. Click **Trimetric** on the Standard Views toolbar.

Step 2. Click **outside front face of holder** and click **Sketch** on the context toolbar, **Fig. 35**.

Step 3. Click **Circle** (**S**) on the Sketch toolbar.

Step 4. Sketch a circle, **Fig. 36**.

Step 5. **Right click graphics area and click Select** from menu to unselect Circle tool.

Step 6. **Ctrl click centerpoint of circle** and **Origin** to select both. Release Ctrl key and click **Make Vertical** on the context toolbar, **Fig. 37**.

Step 7. Click **Smart Dimension** (**S**) on the Sketch toolbar.

Step 8. Add dimensions, **Fig. 38**.

Step 9. Click **Features** on the Command Manager toolbar.

Step 10. Click **Extruded Cut** on the Features toolbar.

Step 11. In the Cut-Extrude Property Manager: under Direction 1, **Fig. 39**
End Condition
Through All
click OK .

Step 12. Save. Use **Ctrl-S**.

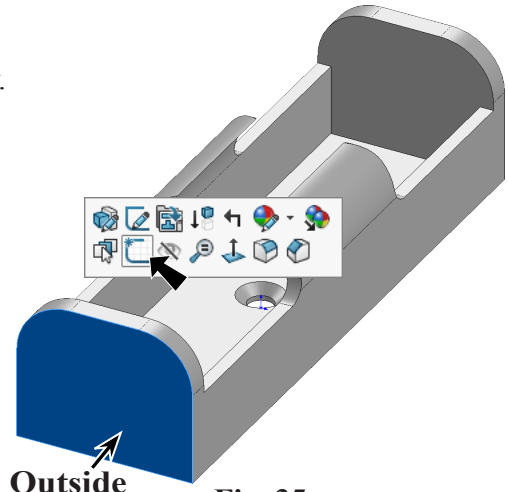

Fig. 35

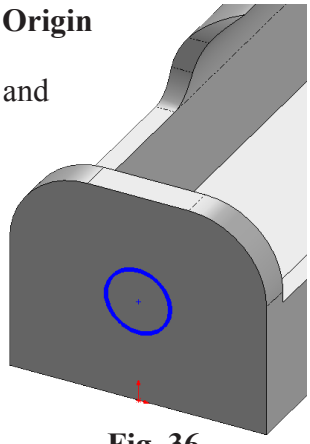

Fig. 36

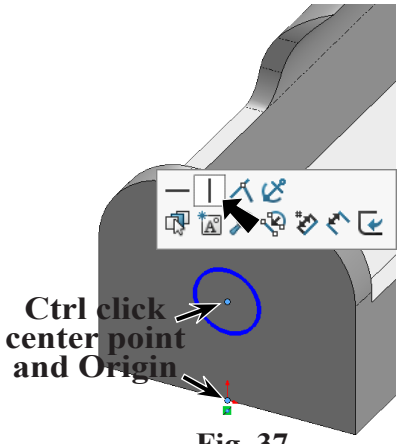

Fig. 37

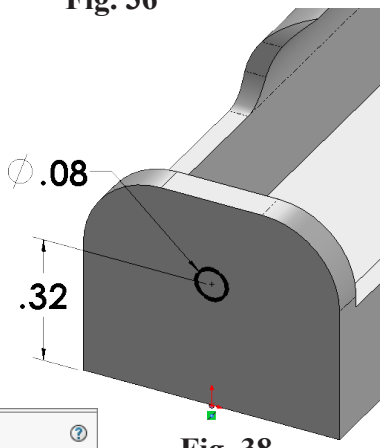

Fig. 38

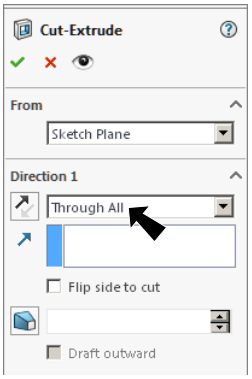

Fig. 39

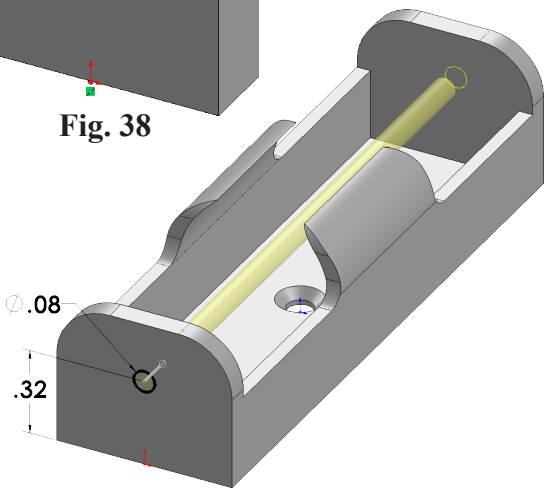

Fig. 40

H. Wire Cutout Hole.

Step 1. Click **outside front face of holder** and click **Sketch** on the context toolbar, **Fig. 41**.

Step 2. Click **Circle** (**S**) on the Sketch toolbar.

Step 3. Sketch a circle, **Fig. 42**.

Step 4. Click **Smart Dimension** (**S**) on the Sketch toolbar.

Step 5. Add dimensions, **Fig. 43**.

Step 6. Click **Features** on the Command Manager toolbar.

Step 7. Click **Extruded Cut** on the Features toolbar.

Step 8. In Cut-Extrude Property Manager: under Direction 1, **Fig. 44**

Depth **.05**

click OK .

Step 9. Save. Use **Ctrl-S**.

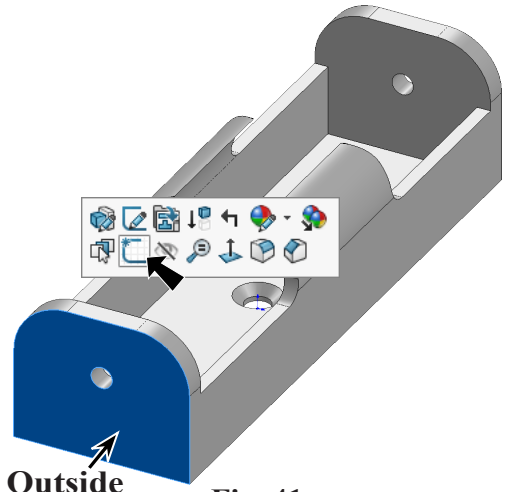

Fig. 41

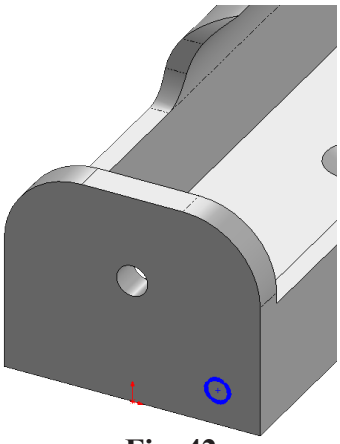

Fig. 42

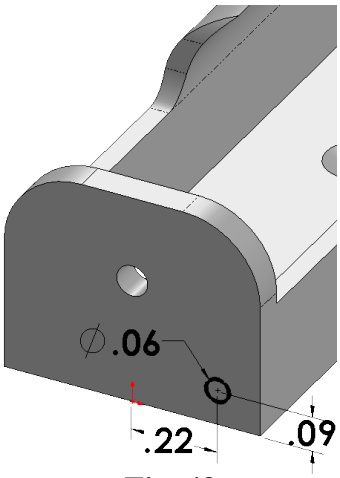

Fig. 43

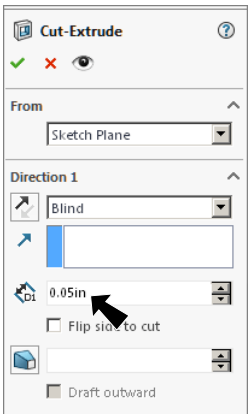

Fig. 44

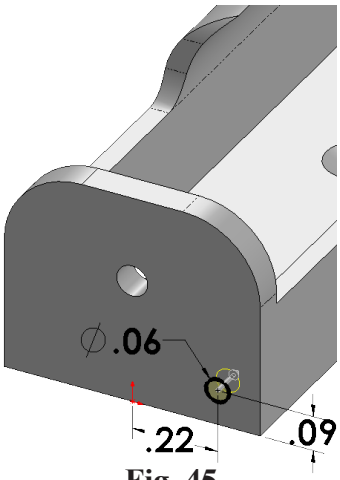

Fig. 45

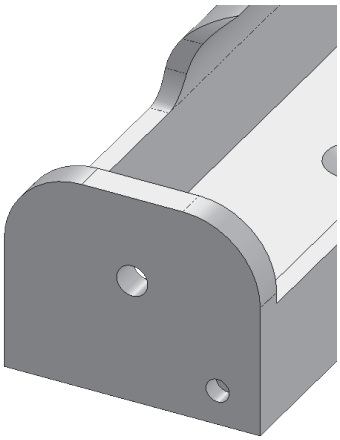

Fig. 46

I. Mirror Wire Cutout Hole.

Step 1. **Ctrl click** the **Front Plane** and **Cut-Extrude4** (**Cutout Hole**) in the Feature Manager to select both, **Fig. 47**.

Step 2. Click **Mirror** Mirror on the Features toolbar.

Step 3. In the Mirror Property Manager click OK ✔.

Step 4. Save. Use **Ctrl-S**.

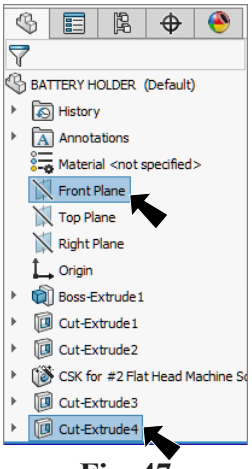

Fig. 47

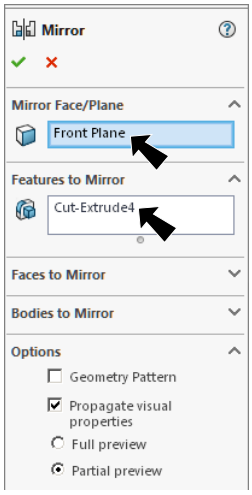

Fig. 48

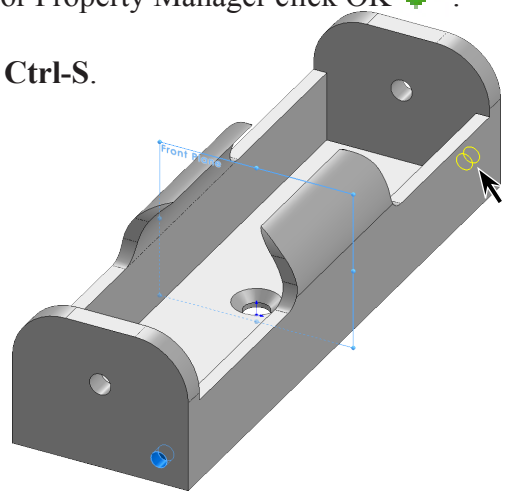

Fig. 49

J. Fillet Edges.

Step 1. Click **Fillet** Fillet on the Features toolbar.

Step 2. In the Fillet Property Manager:

select **FilletXpert**, **Fig. 50**

Radius **.04**

click **bottom side edge**, **Fig. 51**

click **Internal to feature**, **13 Edges** on Fillet pop-up toolbar, **Fig. 51**

click OK ✔.

Step 3. Save. Use **Ctrl-S**.

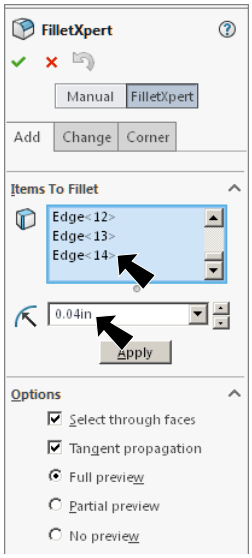

Fig. 50

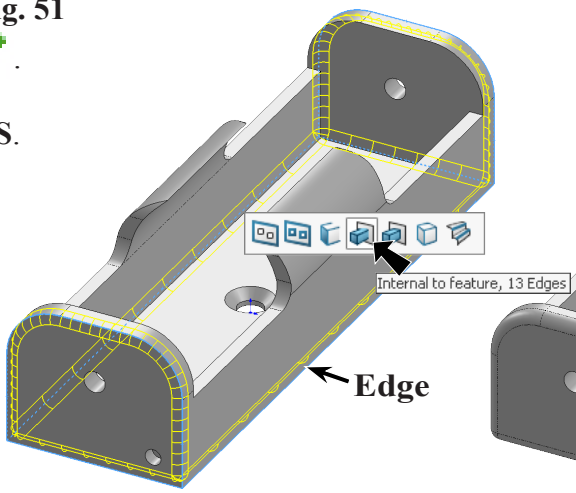

Fig. 51

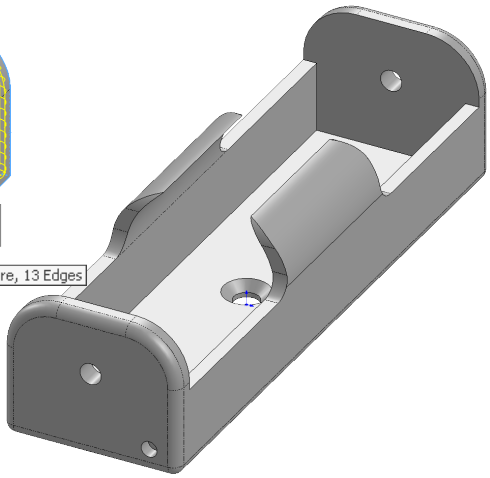

Fig. 52

K. Enable SOLIDWORKS Routing.

Step 1. If necessary, turn on SOLIDWORKS Routing, click the **flyout of Options** on the Standard toolbar and click **Add-Ins**.

Step 2. In the dialog box place a check in the check box under **SOLIDWORKS Routing Active Add-Ins** and **Start-Up**, **Fig. 53**. Click OK.

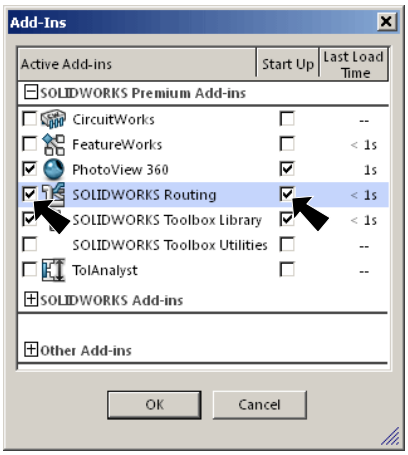

Fig. 53

L. Create C Points for Electrical Routing.

Step 1. Click Tools Menu > Routing > Routing Tools > Create Connection Point.

Step 2. In the Connection Point Property Manager set:
under Selections, **Fig. 54**
click **bottom edge of cutout hole**, **Fig. 55**
under Route type
select **Electrical**
click **Keep Visible** and OK , **Fig. 54**. The Push Pin on allows creation of another C Point.

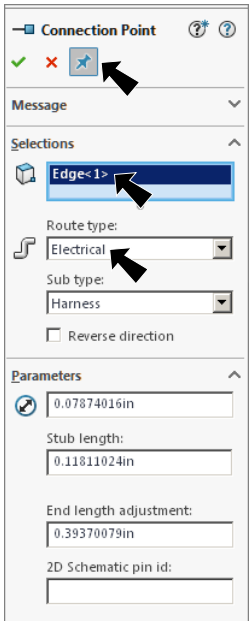

Fig. 54

Step 3. In the Connection Point Property Manager:
under Selections, **Fig. 56**
rotate part to view bottom edge/face of rear cutout out hole, **Fig. 57**
click **bottom edge of rear cutout hole**, **Fig. 57**
C Point should point away from part, if in opposite direction,
check Reverse direction.
click OK and click Cancel .

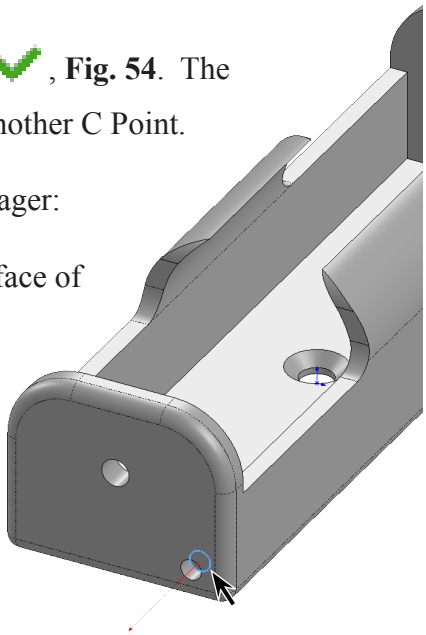

Fig. 55

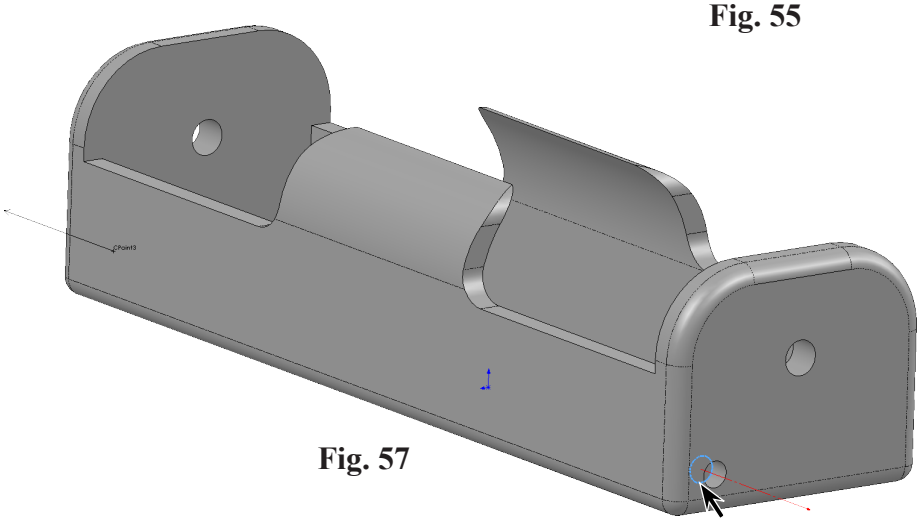

Fig. 57

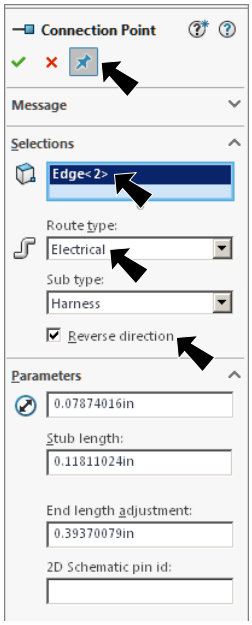

Fig. 56

M. Appearance.

Step 1. Click **Trimetric** on the Standard Views toolbar.

Step 2. Click part to select the part, click **Appearance Callout** on the context toolbar and click **BATTERY...**, **Fig. 58**.

Step 3. In the Appearances Task pane, expand **Plastic**, click **High Gloss** and in the lower pane select **dark gray high gloss plastic**, **Fig. 59**.

Step 4. Click OK in the Property Manager.

Step 5. Save. Use **Ctrl-S**.

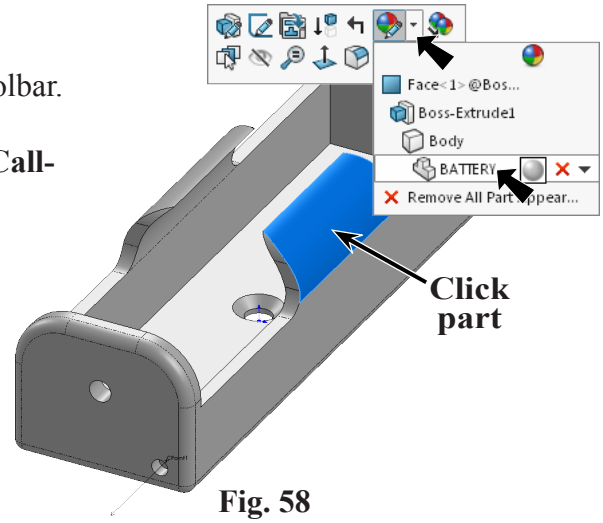

Fig. 58

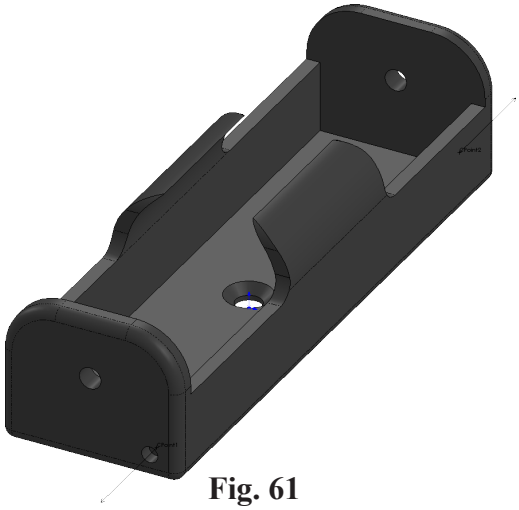

Fig. 61

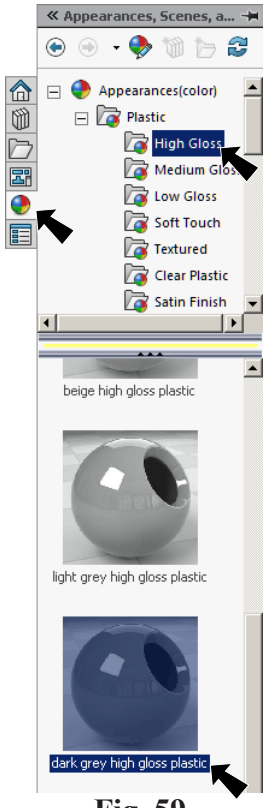

Fig. 59

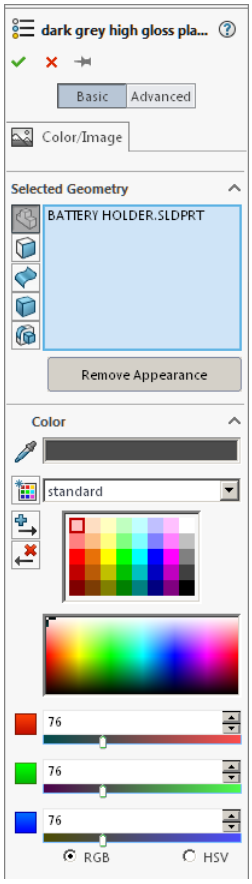

Fig. 60