Chapter 26

Boat

Bushing

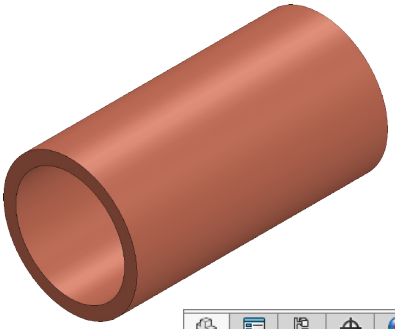

A. Tube.

Step 1. Click File Menu > New, click **Part** and OK.

Step 2. Click **Front Plane** in the Feature Manager and click **Sketch** on the context toolbar, **Fig. 1**.

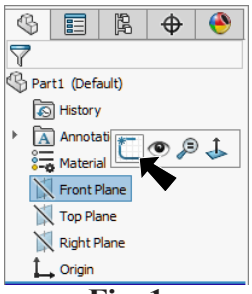

Fig. 1

Step 3. Click **Circle** (**S**) on the Sketch toolbar.

Step 4. Draw **two circles** starting at the Origin , **Fig. 2**.

Step 5. Click **Smart Dimension** (**S**) on the Sketch toolbar.

Step 6. Dimension diameters, **Fig. 2**.

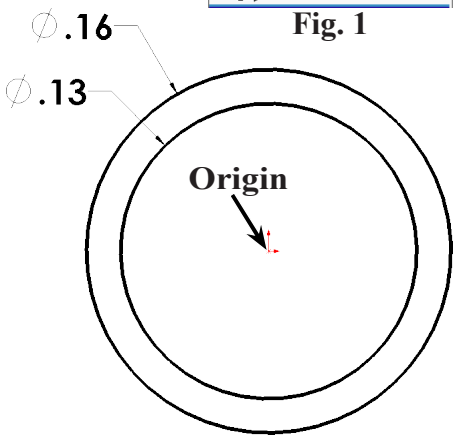

Fig. 2

Step 7. Click **Features** on the Command Manager toolbar.

Step 8. Click **Extruded Boss/Base** on the Features toolbar.

Step 9. In the Boss-Extrude Property Manager set:
under Direction 1, **Fig. 3**
Depth **.3**
click OK .

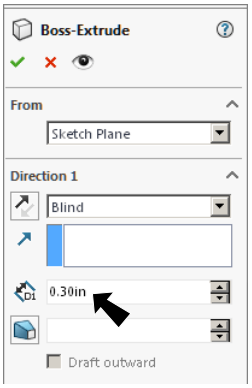

Fig. 3

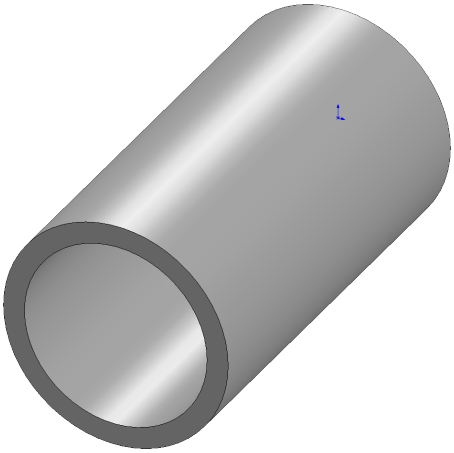

Fig. 4

B. Save as "BUSHING".

Step 1. Click File Menu > Save As.

Step 2. Key-in **BUSHING** for the file-name and press ENTER.

© Cudacountry.net Tech Ed
http://www.cudacountry.net email:cudacountry@hotmail.com

C. Material POM Acetal Copolymer.

Step 1. **Right click Material** in the Feature Manager and click **Edit Material**.

Step 2. Expand **Copper Alloys** in the material tree and select **Copper**. Click **Apply** and **Close**.

Step 3. Save. Use **Ctrl-S**.

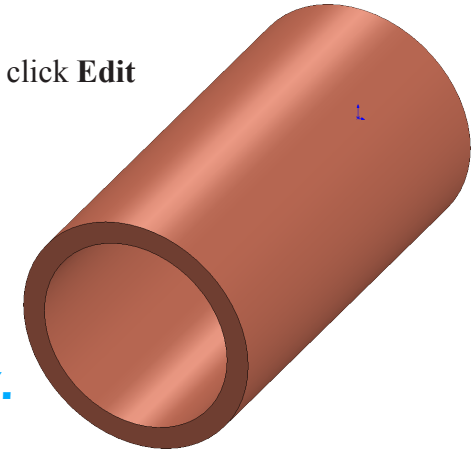

Fig. 5

D. Insert Bushing into BOAT ASSEMBLY.

Step 1. Open your **BOAT ASSEMBLY** file.

Step 2. Rotate view, **Fig. 6**. Hold down middle mouse button (wheel) and drag.

Step 3. Click **Insert Components** on the Assembly toolbar.

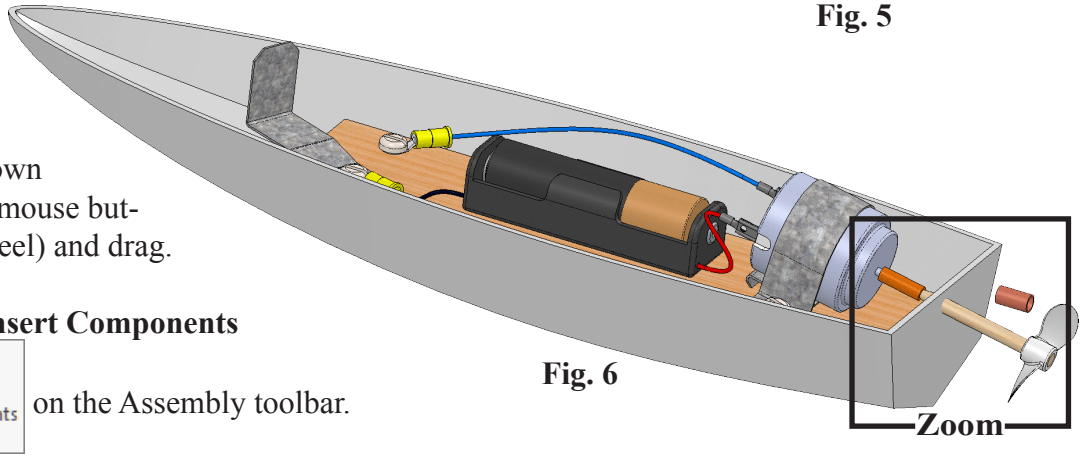

Fig. 6

Step 4. **Browse** and place **BUSHING** as positioned in **Fig. 6**.

E. Mate: Prop Shaft and Bushing.

Step 1. Zoom in around **Bushing and Prop Shaft**, **Fig. 6**. To zoom, place the cursor over the Bushing and Prop Shaft area and spin the wheel on mouse back. While spinning the wheel keep cursor on the Bushing and Prop Shaft.

Step 2. Click **Mate** on the Assembly toolbar.

Step 3. Click **cylindrical face of Bushing** and **cylindrical face of Prop Shaft**, **Fig. 7**.

Step 4. Click Add/Finish Mate in Mate pop-up toolbar to add a **Concentric** mate.

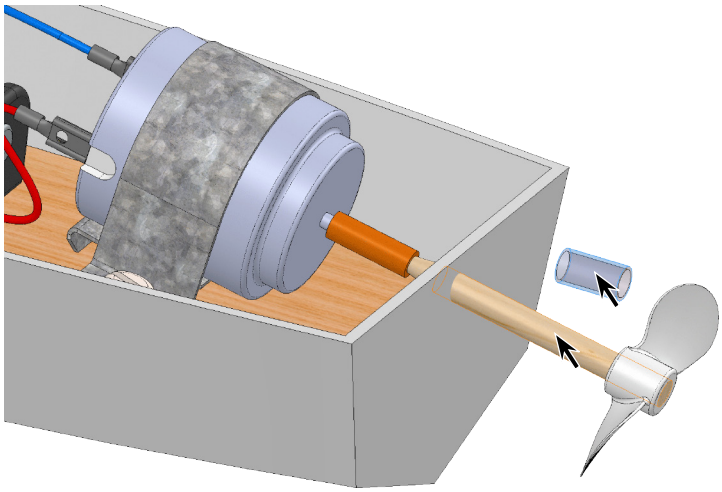

Fig. 7

Step 5. Click **rear face of Bushing and rear face of Motor**, **Fig. 8**.

Step 6. Click **Distance** in Mate pop-up, **Fig. 9**. Set **distance .8** and press ENTER. The Coupling should **extent .8 out rear of Motor**, **Fig. 10**. If positioned in opposite direction, click **Flip Dimension** in the Mate pop-up, **Fig. 9**. Click Add/Finish Mate to add Distance mate.

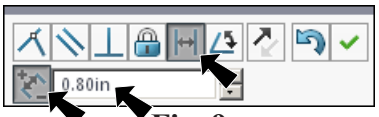

Fig. 9

Step 7. Click OK in the Property Manager.

Step 8. Save. Use **Ctrl-S**

F. Indent Bushing Hole in Hull.

Step 1. Click the **Hull** and click **Edit Part** on the context toolbar, **Fig. 10**.

Step 2. Click Insert Menu > Features > Indent.

Step 3. In the Indent Property Manager:
under Selections, **Fig. 11**
Target body:
click **Hull**, **Fig. 12**
Tool body region:
click **Prop Shaft**, **then Bushing**
check **Cut**
click OK .

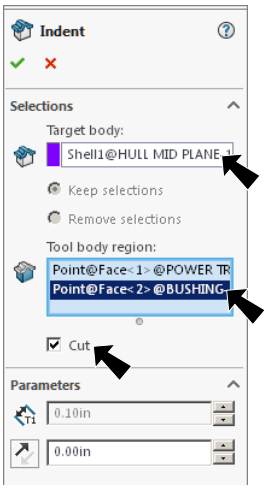

Fig. 11

Step 4. Click **Exit Edit Component** in top right corner of graphics area to return to the assembly.

Step 5. Save. Use **Ctrl-S**

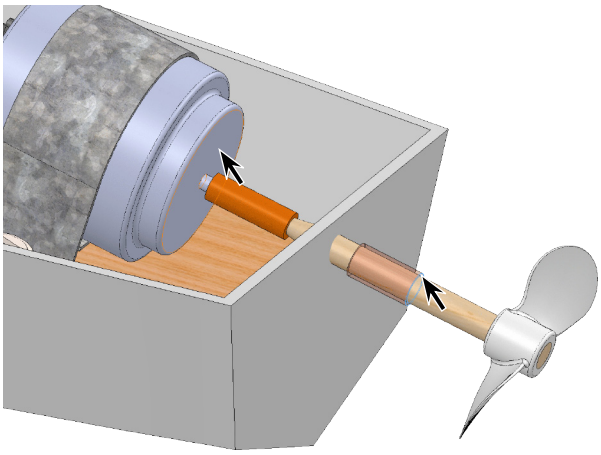
Fig. 8

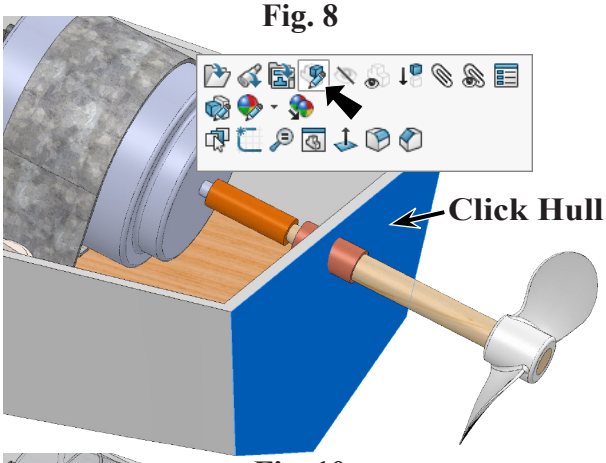

Fig. 10

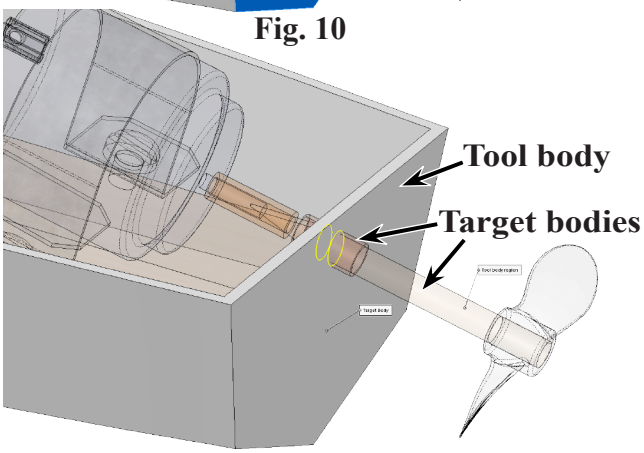

Fig. 12

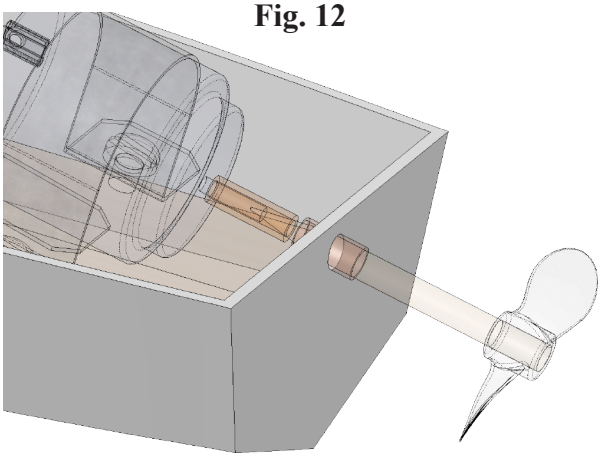
Fig. 13