Boat Motor

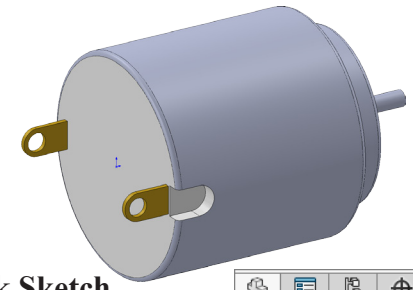

A. Motor.

Step 1. Click File Menu > New, click **Part** and OK.

Step 2. Click **Right Plane** in the Feature Manager and click **Sketch** on the context toolbar, **Fig. 1**.

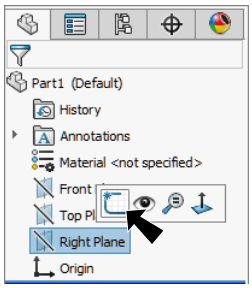

Fig. 1

Step 3. Click **Circle** (**S**) on the Sketch toolbar.

Step 4. Sketch **circle** starting at the Origin , **Fig. 2**.

Step 5. Click **Smart Dimension** (**S**) on the Sketch toolbar.

Step 6. Dimension circle **diameter .93**, **Fig. 2**.

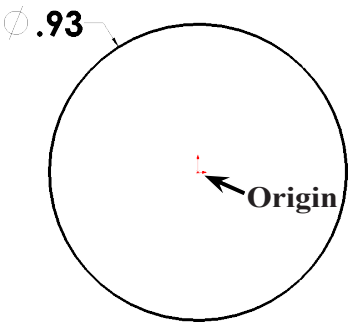

Fig. 2

Step 7. Click **Features** on the Command Manager toolbar.

Step 8. Click **Extruded Boss/Base** on the Features toolbar.

Step 9. In the Boss-Extrude Property Manager set:
under Direction 1, **Fig. 3**
Depth **1**
click OK .

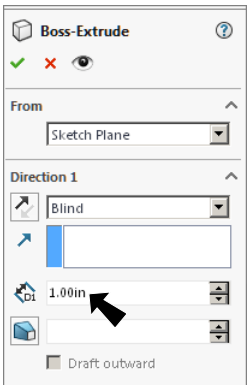

Fig. 3

Step 10. Click Zoom to Fit (**F**) on the View toolbar.

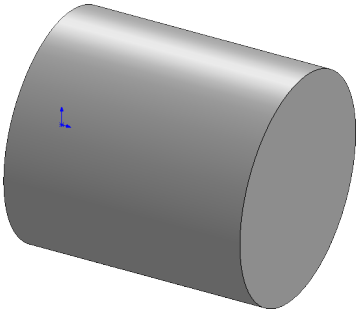

Fig. 4

B. Save as "MOTOR".

Step 1. Click File Menu > Save As.

Step 2. Key-in **MOTOR** for the filename and press ENTER.

© Cudacountry.net Tech Ed
http://www.cudacountry.net email:cudacountry@hotmail.com

C. Cut.

Step 1. Click **side face** and click **Sketch** on the context toolbar, **Fig. 5**.

Step 2. Click **Circle** (**S**) on the Sketch toolbar.

Step 3. Sketch a circle at the Origin , **Fig. 6**.

Step 4. Click **Smart Dimension** (**S**) on the Sketch toolbar.

Step 5. Dimension **diameter .74**, **Fig. 6**.

Step 6. Click **Features** on the Command Manager toolbar.

Step 7. Click **Extruded Cut** on the Features toolbar.

Step 8. In the Cut-Extrude Property Manager set:
under Direction 1, **Fig. 7**

Depth **.13**
check **Flip side to cut**
click OK .

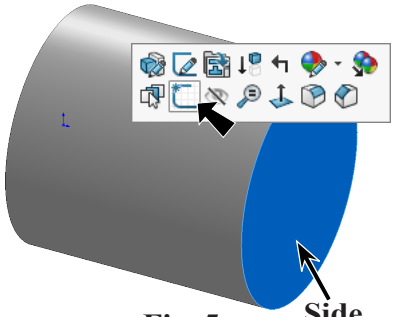

Fig. 5

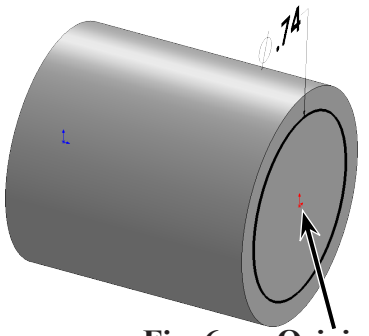

Fig. 6

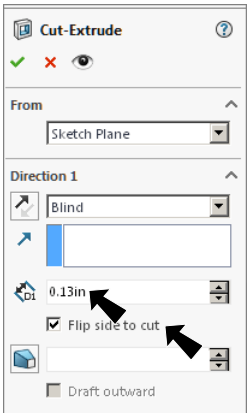

Fig. 7

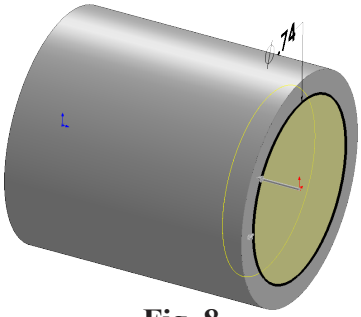

Fig. 8

D. Fillets.

Step 1. Click **Fillet** on the Features toolbar.

Step 2. In the Fillet Property Manager set:

Radius **.02**, **Fig. 9**
click **both cylindrical faces**, **Fig. 10**
click OK .

Step 3. Save. Use **Ctrl-S**.

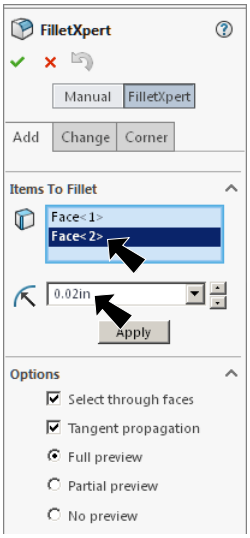

Fig. 9

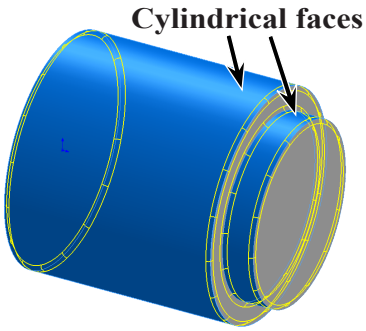

Fig. 10

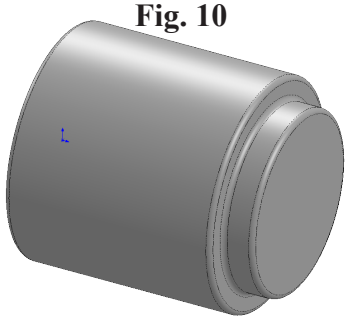

Fig. 11

E. Shaft.

Step 1. Click the **side face** and click **Sketch** on the context toolbar, **Fig. 12**.

Step 2. Click **Circle** on the Sketch toolbar.

Step 3. Starting at the Origin sketch a circle for the shaft, **Fig. 13**.

Step 4. Click **Smart Dimension** (**S**) on the Sketch toolbar.

Step 5. Dimension the circle **diameter .07**, **Fig. 13**.

Step 6. Click **Features** on the Command Manager toolbar.

Step 7. Click **Extruded Boss/Base** on the Features toolbar.

Step 8. In the Boss-Extrude Property Manager set:
under Direction 1, **Fig. 14**
Depth **.31**
click OK .

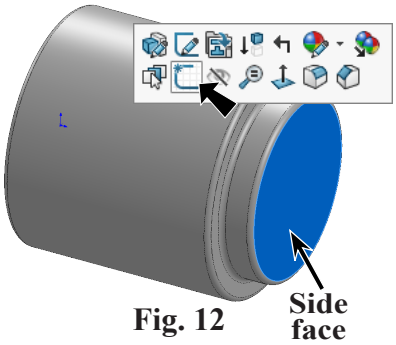

Fig. 12

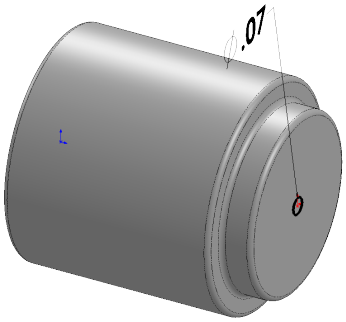

Fig. 13

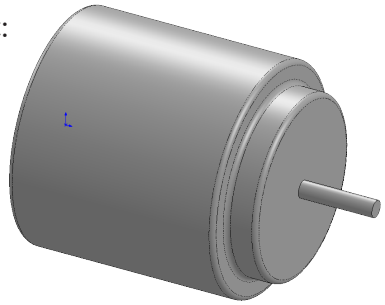
Fig. 15

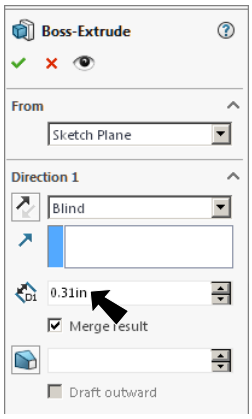

Fig. 14

F. Cut Polarity Slot.

Step 1. Click **Front Plane** in the Feature Manager and click **Sketch** on the context toolbar, **Fig. 16**.

Step 2. Click **Normal To** on the Standard Views toolbar. (**Ctrl-8**)

Step 3. Click **Corner Rectangle** (**S**) on the Sketch toolbar.

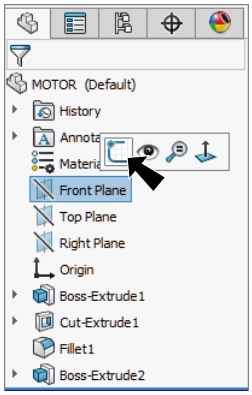

Fig. 16

Step 4. Sketch a rectangle **to left of Motor**, **Fig. 17**.

Step 5. **Right click graphics area and click Select** from menu to unselect Rectangle tool.

Step 6. **Ctrl click** the **left side line of the rectangle** and the **Origin**. Release Ctrl key and click **Make Midpoint** on the context toolbar, **Fig. 18**.

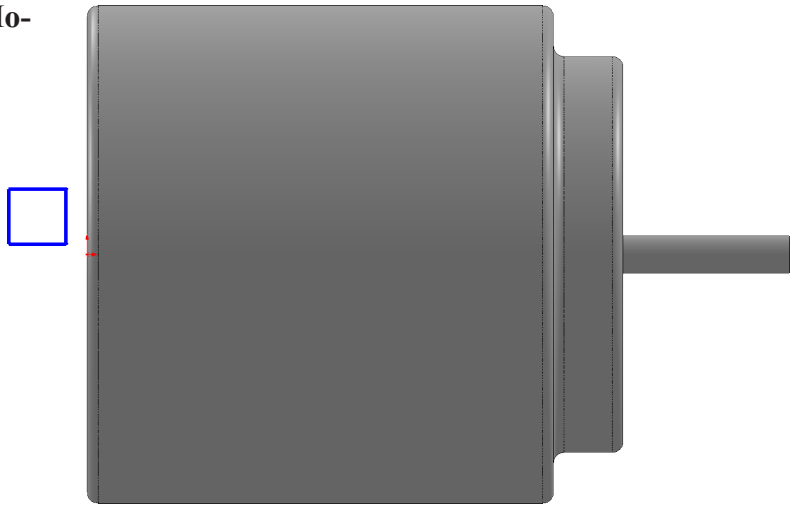

Fig. 17

Step 7. Click **Smart Dimension** (**S**) on the Sketch toolbar.

Step 8. Add dimensions, **Fig. 19**

Step 9. Click **Circle** (**S**) on the Sketch toolbar.

Step 10. Sketch **circle from Midpoint of right line of rectangle** to coincident to endpoint of rectangle, **Fig. 20**.

Fig. 18

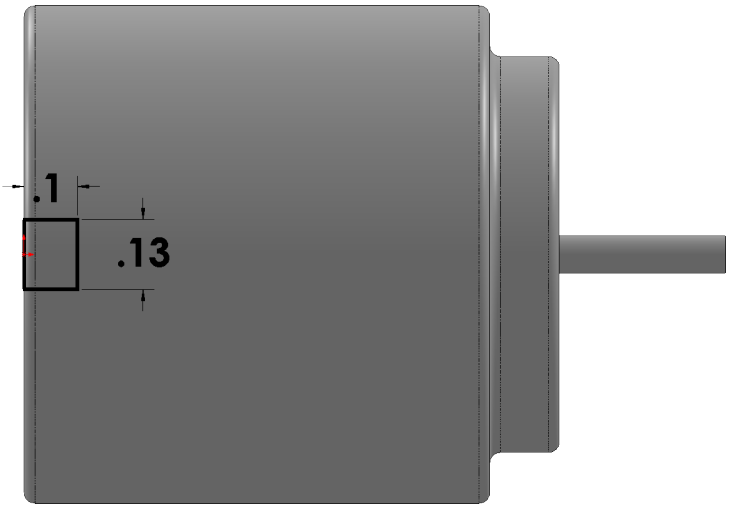

Fig. 19

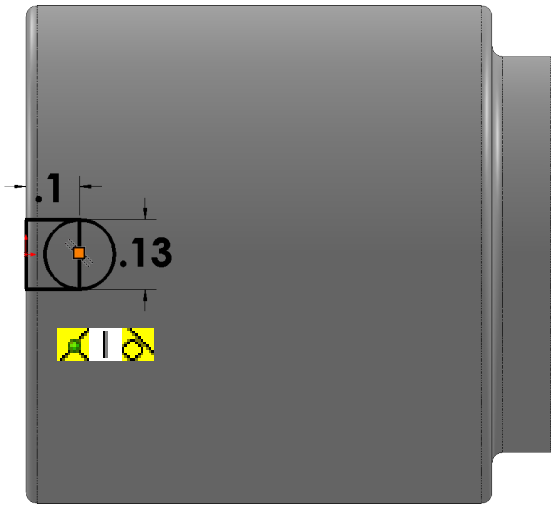

Fig. 20

Step 11. Rotate view slightly to view **rear of Motor**, **Fig. 22**. Hold the **middle mouse button** (wheel) and rotate view around to view rear.

Step 12. Click **Features**

on the Command Manager toolbar.

Step 13. Click **Extruded Cut** 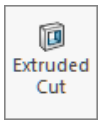

on the Features toolbar.

Step 14. In the Cut Extrude Property Manager set:

under From, **Fig. 21**

Start Condition **Offset**

Offset Value .4

under Direction 1

End Condition

Through All

click **Reverse direction**

under Selected Contours

click **all 3 contours**, **Fig. 22**

click OK ✔ .

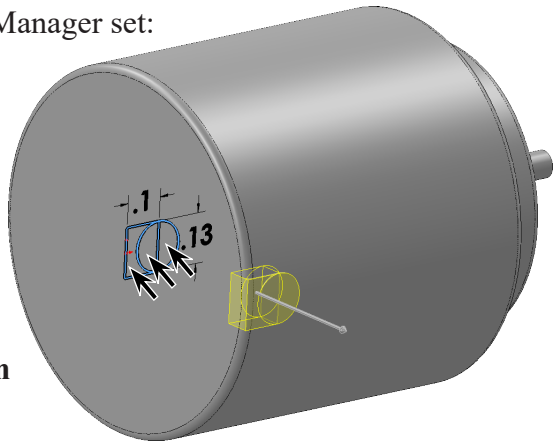

Fig. 22

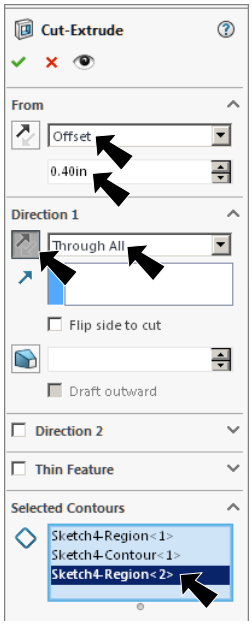

Fig. 21

Step 15. Save. Use **Ctrl-S**.

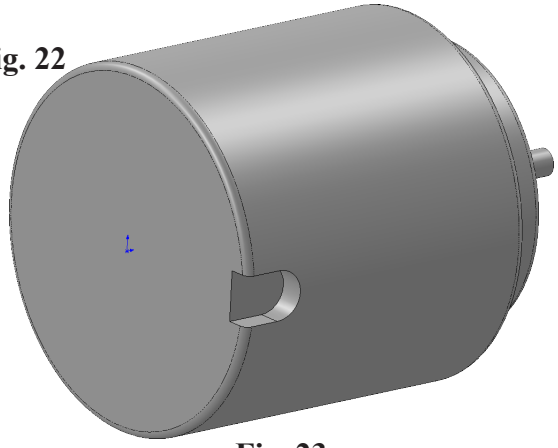

Fig. 23

G. Terminal.

Step 1. Click **Front Plane** in the Feature Manager and click **Sketch** on the context toolbar, **Fig. 24**.

Step 2. Click **Normal To** on the Standard Views toolbar. (**Ctrl-8**)

Step 3. Click **Corner Rectangle** (**S**) on the Sketch toolbar.

Step 4. Sketch a rectangle **left of Motor**, **Fig. 25**.

Step 5. **Right click graphics area and click Select** from menu to unselect Rectangle tool.

Step 6. **Ctrl click** the **right side line of rectangle** and **Origin**. Release Ctrl key and click **Make Mid-point** on the context toolbar, **Fig. 26**.

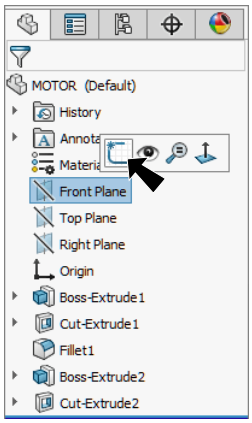

Fig. 24

Fig. 25

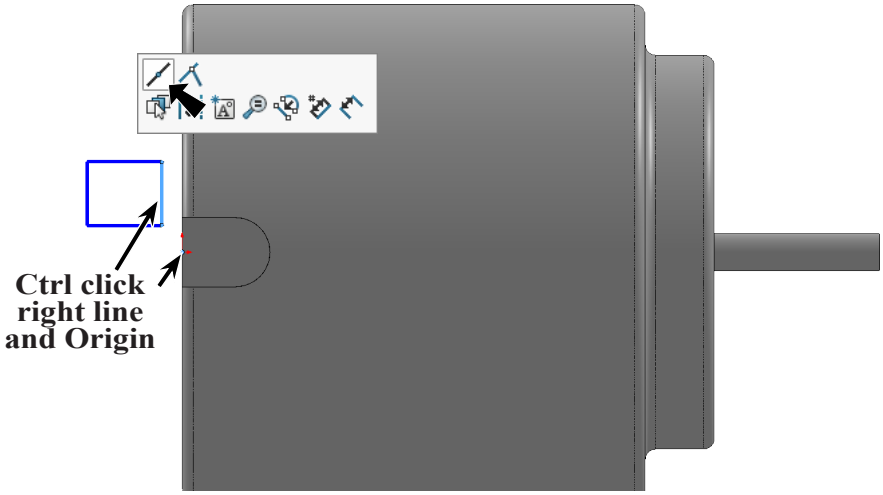

Fig. 26

Step 7. Click **Circle** (**S**) on the Sketch toolbar.

Step 8. Sketch **two circles from Midpoint of left line of rectangle**. Sketch one circle coincident with the endpoint of rectangle, **Fig. 27**.

Fig. 27

Step 9. Click **Smart Dimension** (**S**) on the Sketch toolbar.

Step 10. Add dimensions, **Fig. 28**.

Step 11. Click **Features** on the Command Manager toolbar.

Step 12. Click **Extruded Boss/Base** on the Features toolbar.

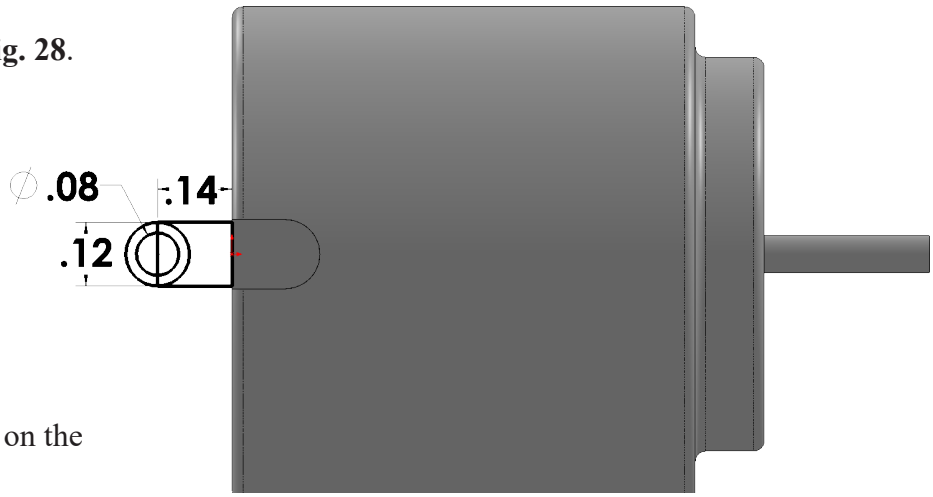

Fig. 28

Step 13. Rotate view slight to view **rear of Motor**, **Fig. 30**. Hold the **middle mouse button** (wheel) and rotate view around to view rear.

Step 14. In the Boss Extrude Property Manager set:

under From, **Fig. 29**

Start Condition **Offset**

Offset Value .37

under Direction 1

Depth **.02**

under Selected Contours

click **both contours between circles** and **contour right of circle**, **Fig. 30**

click OK .

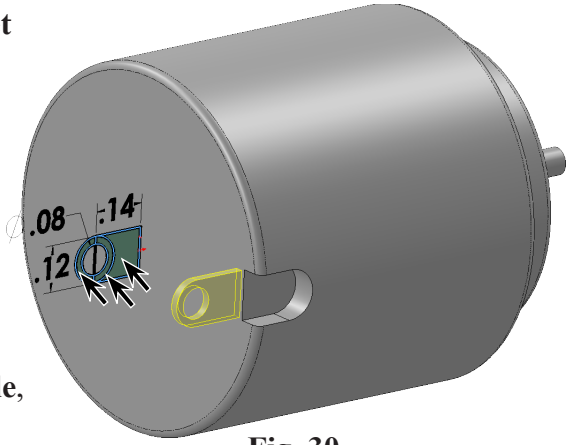

Fig. 30

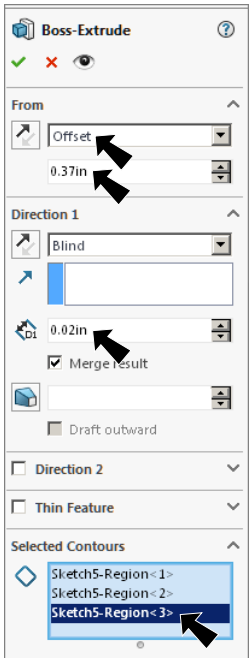

Fig. 29

Step 15. Save. Use **Ctrl-S**.

H. Circular Pattern Terminal.

Step 1. Click **Circular Pattern** 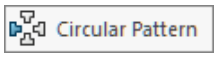

in the **Linear Pattern flyout**

on the Features toolbar. Click the **flyout arrow** to select Circular Pattern.

Step 2. In the Circular Pattern Property Manager set:

under Features and Faces

Boss-Extrude3 (Terminal), Fig. 31

under Parameters

click in the **Pattern Axis** box

click **cylindrical face** of Motor, **Fig. 32**

Angle **360º**

Number of Instances **2**

check **Equal spacing**

click OK .

Step 3. Save. Use **Ctrl-S**.

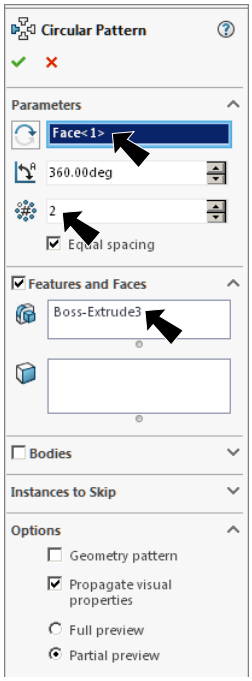

Fig. 31

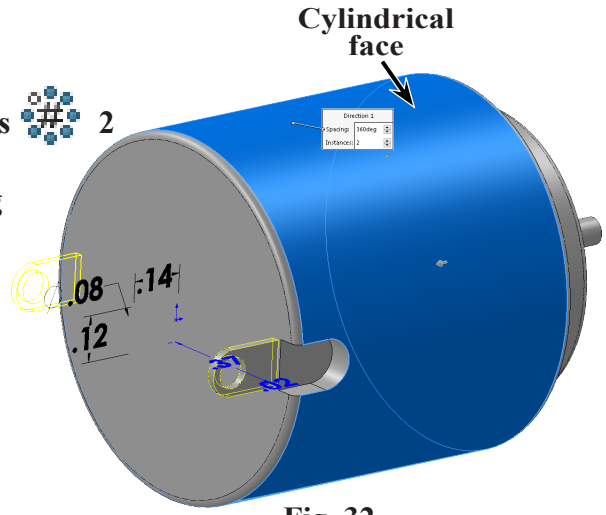

Fig. 32

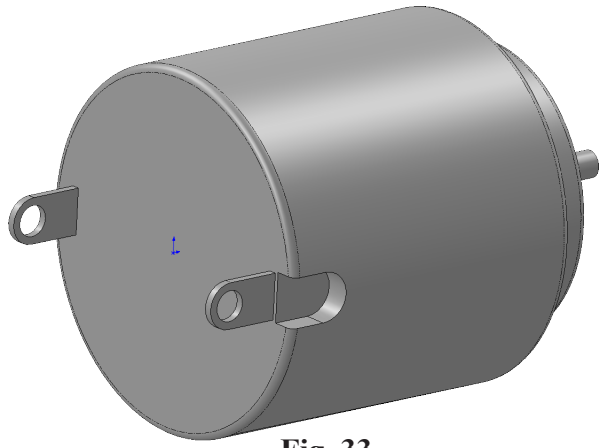

Fig. 33

I. Mate Reference 1.

Step 1. Click a **cylindrical edge of a terminal** to select it, **Fig. 34**.

Step 2. Click **Reference Geometry** on the Features toolbar and **Mate Reference** from the menu.

Step 3. In the Mate Reference Manager:
under **Primary** Reference Entity, **Fig. 35**
edge was preselected

under **Secondary** Reference Entity
click in Entity box
and click **top face of terminal**, **Fig. 36**

Mate Reference Type
Parallel

click OK .

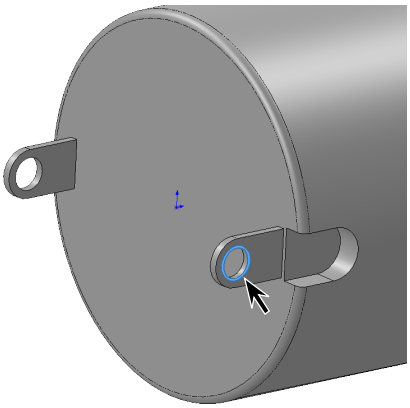

Fig. 34

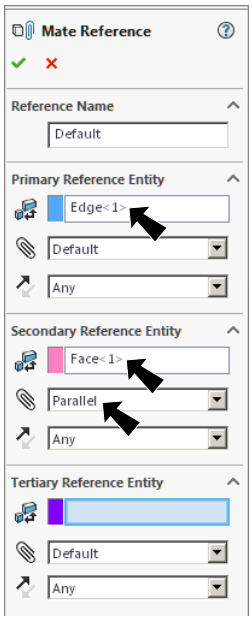

Fig. 35

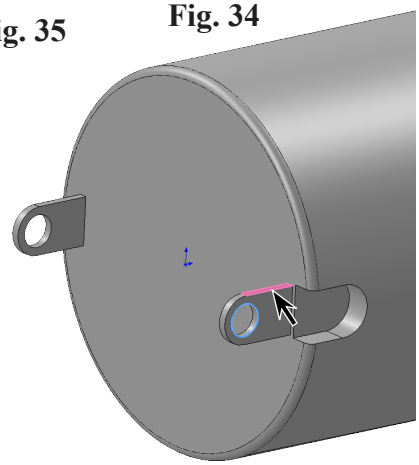

Fig. 36

J. Mate Reference 2.

Step 1. Click **cylindrical edge of the other terminal** to select it, **Fig. 37**.

Step 2. Click **Reference Geometry** on the Features toolbar and **Mate Reference** from the menu.

Step 3. In the Mate Reference Manager:
under **Primary** Reference Entity, **Fig. 38**
edge was preselected

under **Secondary** Reference Entity
click in Entity box
and click **top face of terminal**, **Fig. 39**

Mate Reference Type
Parallel

click OK .

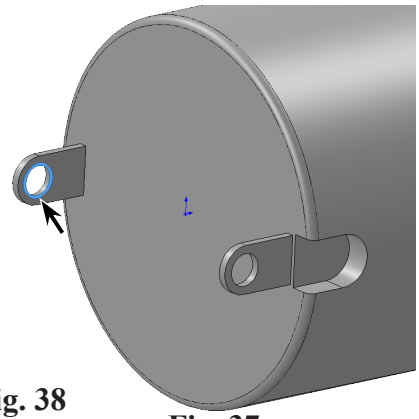

Fig. 37

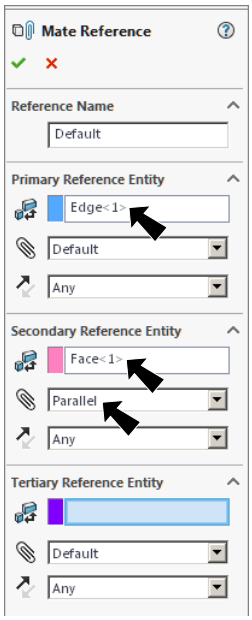

Fig. 38

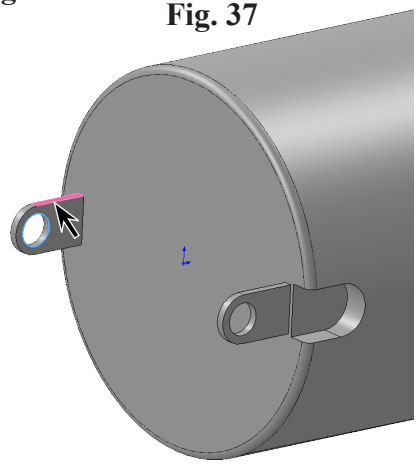

Fig. 39

K. Material Chrome Stainless.

Step 1. **Right click Material** in the Feature Manager and click **Edit Material**, **Fig. 40**.

Step 2. Expand **Steel** in the material tree and click **Chrome Stainless Steel**. Click **Apply** and **Close**.

Step 3. Save. Use **Ctrl-S**.

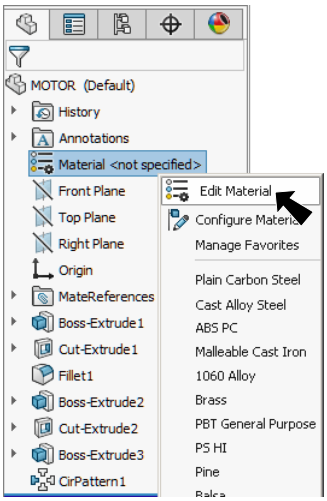

Fig. 40

L. Appearance.

Step 1. Click the Motor to select the part, click **Appearances Callout** on the context toolbar and click **Motor**, **Fig. 41**.

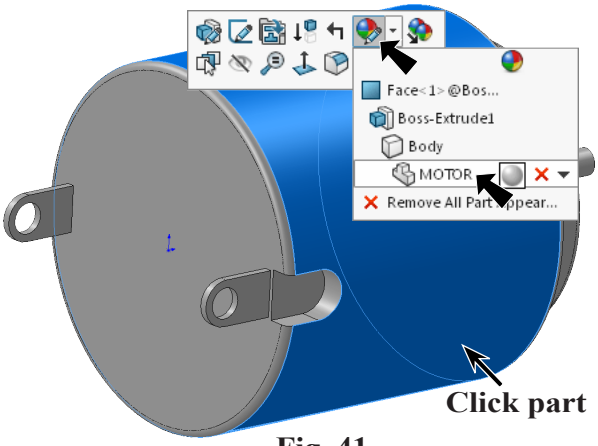

Fig. 41

Step 2. In the Appearances Property Manager:
under Selected Geometry, **Fig. 42**
click **Remove Appearance**

under Color:
set **RGB values:**
R 202
G 209
B 222

click **Keep Visible** and OK , **Fig. 42**. The Push Pin on allows selection of another appearance.

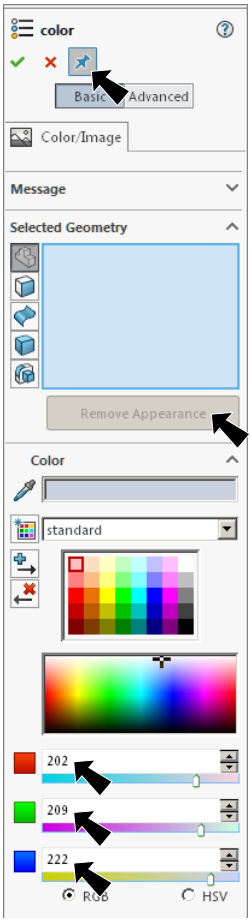

Fig. 42

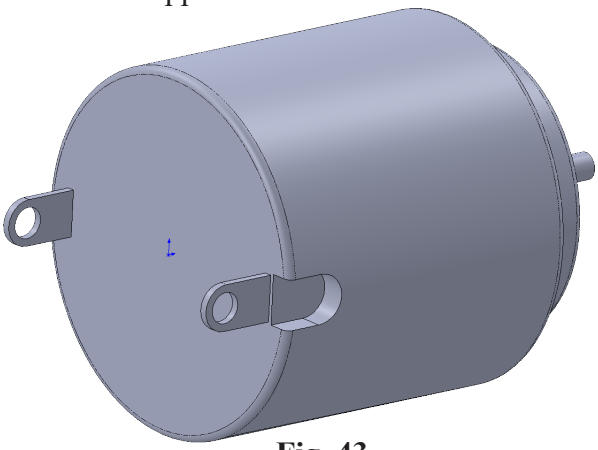

Fig. 43

Step 3. Over at the Task pane, click the Appearances Task tab , expand **Plastic**, click **High Gloss** and in the lower pane select **white high gloss plastic**, **Fig. 44**.

Step 4. In the Appearances Property Manager, under Selected Geometry

click **Select Faces** , **Fig. 45**

click **rear face of Motor**, **Fig. 46**

click **Select Features** , **Fig. 47**

click **Polarity slot** Cut-Exturde-2, **Fig. 48**

click OK .

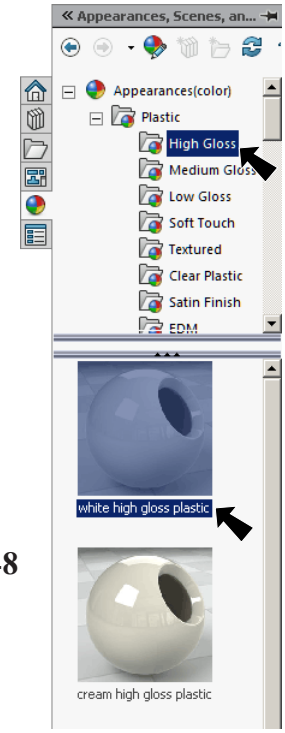

Fig. 44

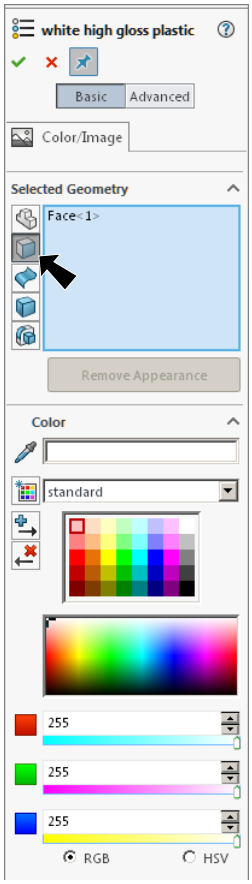

Fig. 45

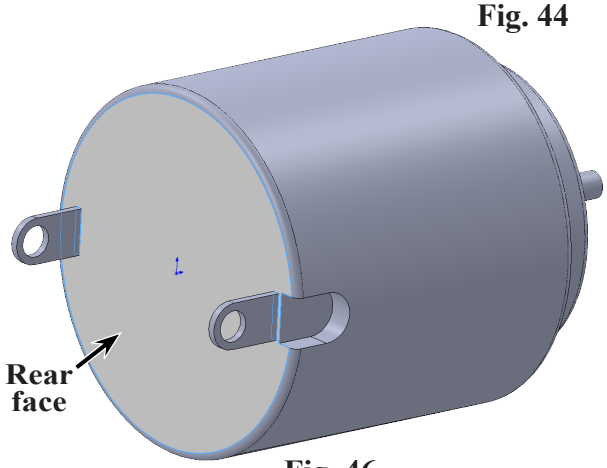

Fig. 46

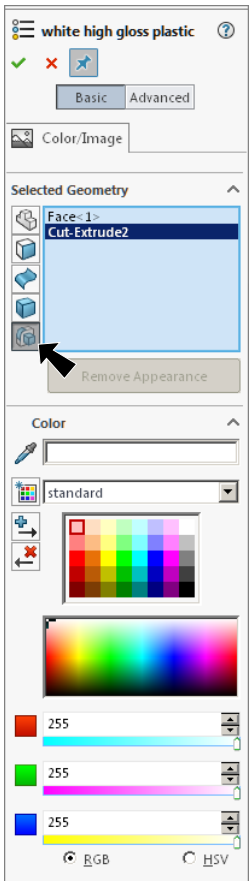

Fig. 47

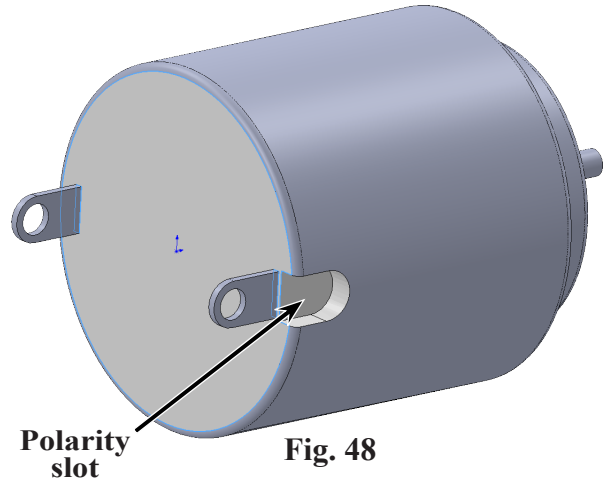

Fig. 48

Step 5. Back over at the Task pane, click the Appearances Task tab , expand **Metal**, click **Brass** and in the lower pane select **polished brass**, **Fig. 49**.

Step 6. In the Appearances Property Manager, under Selected Geometry

Select Features should still be selected, **Fig. 50**

click **both terminals**, **Fig. 51**

click OK ✔ and then click Cancel ✘.

Step 7. Save. Use **Ctrl-S**.

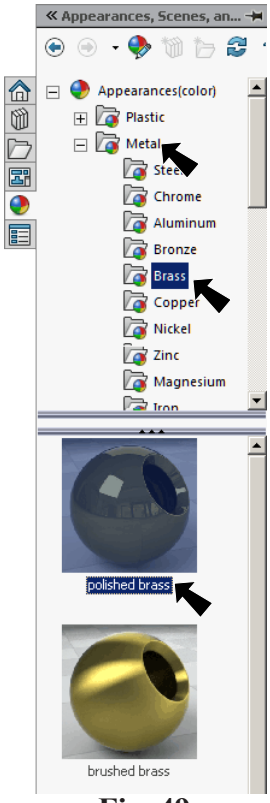

Fig. 49

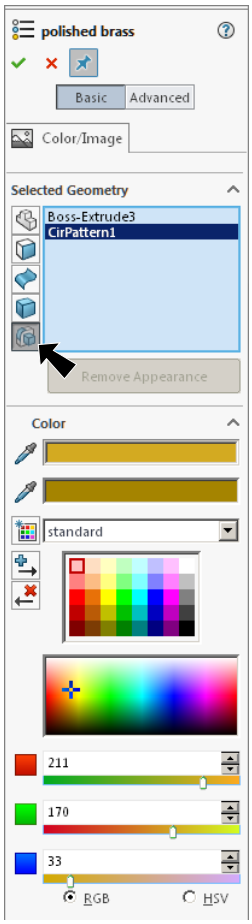

Fig. 50

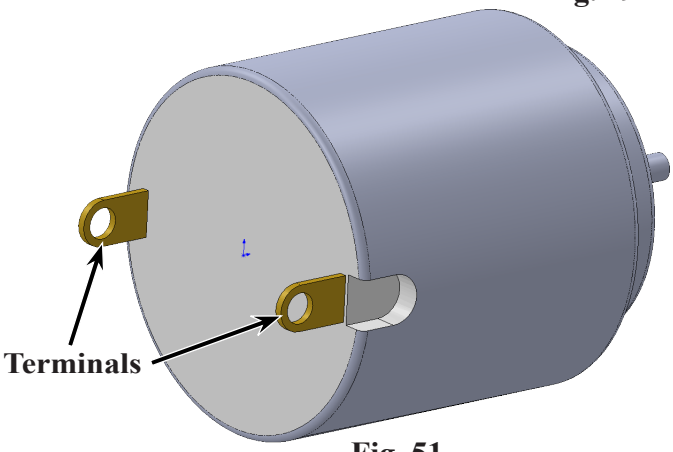

Fig. 51